FabricAir

Main Calculations

2013

Main
Calculations

* Calculation Examples

2013

Calculation

EXAMPLES

Basic rules for round
Fabric Ducts.
Inlet from one end.

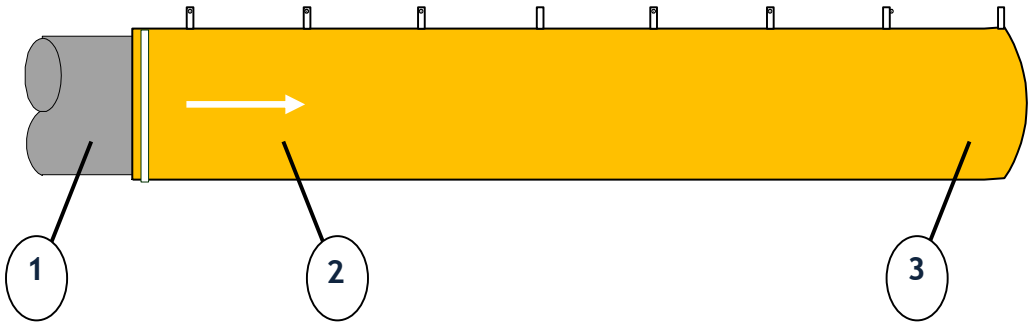

Recommended values

1a. Max. inlet velocity 10 m/s (recommended 6 - 8 m/s)
1b. Pstat. ≥2,5xPdyn.
2. Pstat. min. 60 Pa
3. Recommended max. Pstat = 150 Pa

2013

Calculation

EXAMPLES

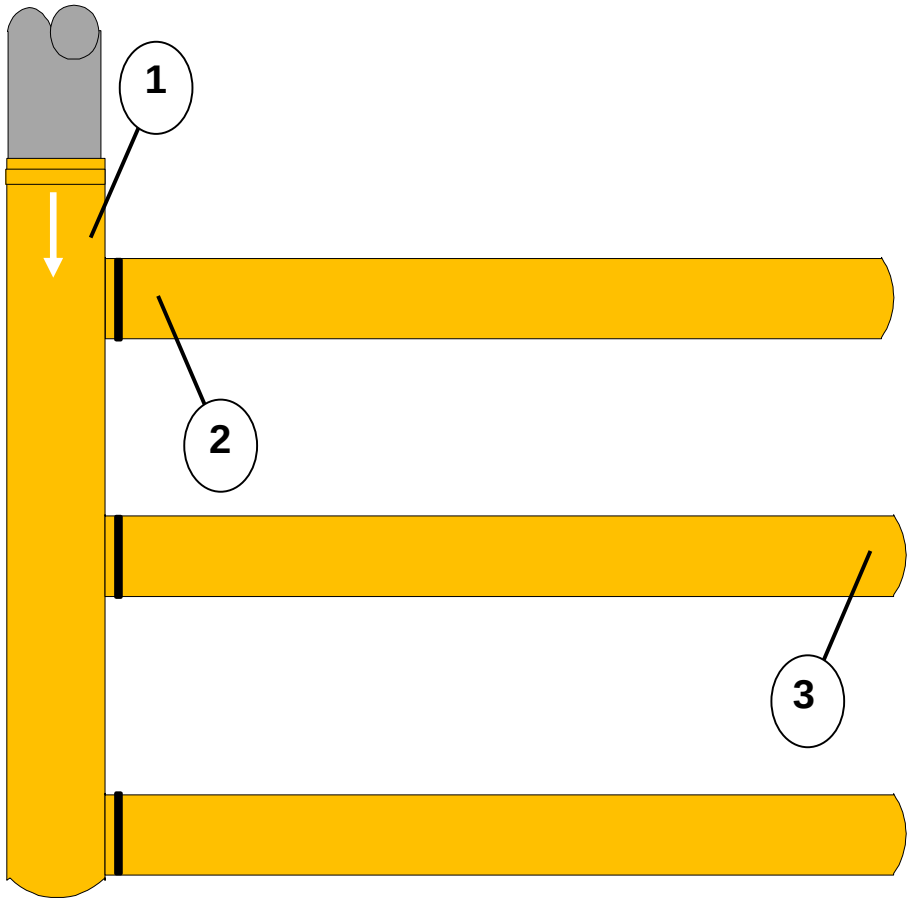

Recommended values

1a. Max. 8 m/s.
1b. Pst. ≥2,5xPdyn.
1c. Pstat min. 60 Pa
2. Max.10 m/s.
3. Pstat max. 150 Pa

Basic rules for round Fabric Ducts with distribution Ducts in Fabric.
Inlet from one end

2013

Calculation

EXAMPLES

A - A

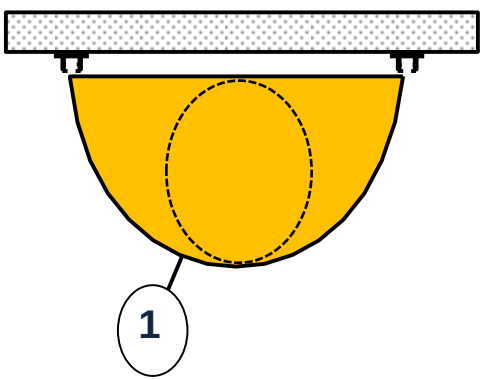

Recommended Values

1a. Max. 6 m/s.
1b. Pstat. ≥2,5xPdyn.
2a. Pstat min. 30 Pa
2b. Max. 7 m/s.
3. Pstat max. 150 Pa

D-shaped Fabric Ducts.
Inlet from one end

2013

Calculation

EXAMPLES

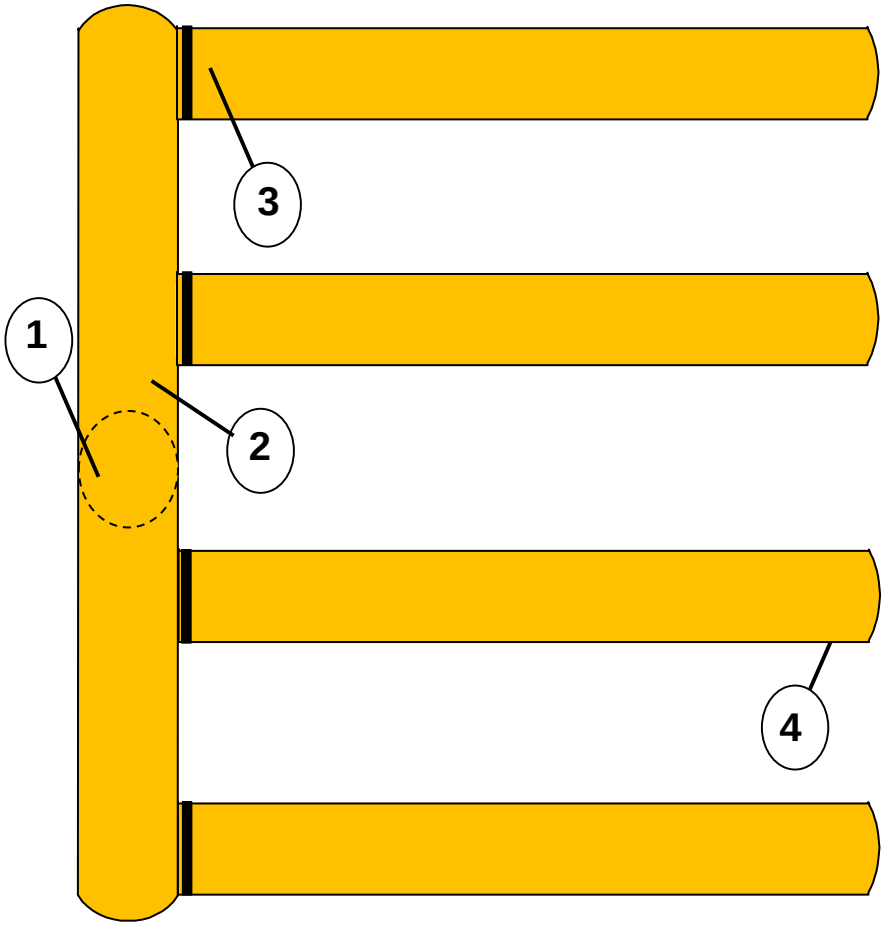

Recommended Values

1a. Max. 4 m/s.
1b. Pstat. ≥ 2,5xPdyn.
2a. Pstat min. 30 Pa
2b. Max. 7 m/s.- on each side.
3a. Max. 10 m/s.
4. Pstat max.150 Pa

Basic rules for D-shaped Fabric Ducts with distribution Ducts in Fabric.
Inlet from middle

2013

Calculation

EXAMPLES

Basic rules for round Fabric Ducts with slots

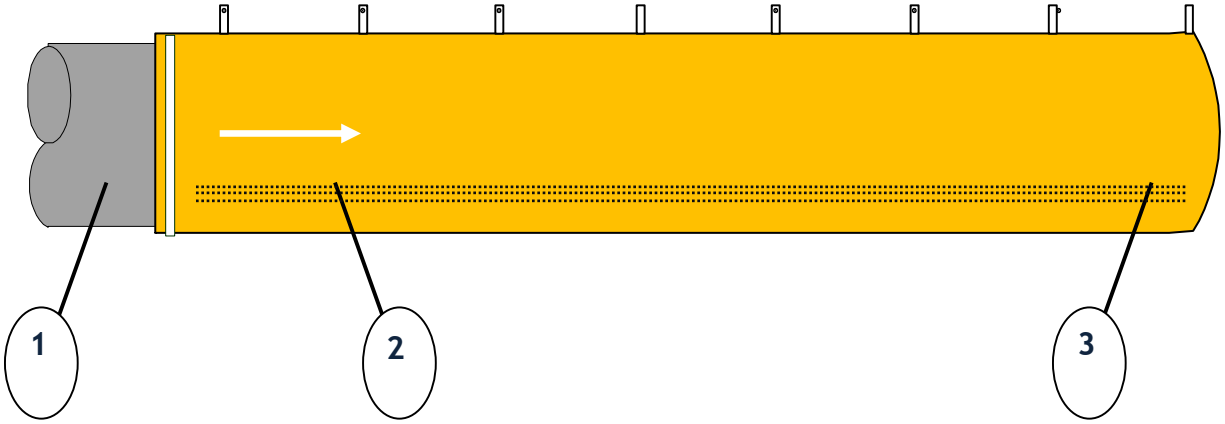

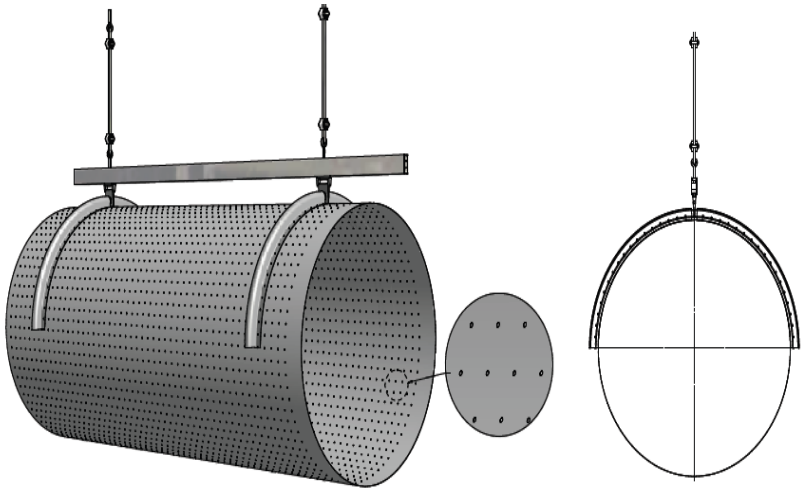

Recommended Values

1a. Max. inlet velocity 8,0 m/s (recommended 6 - 8 m/s)
1b. Pstat. ≥2,5xPdyn.
2. Pstat. min. 60 Pa
3. Recommended max. Pstat = 150 Pa

2013

Calculation

EXAMPLES

Basic rules for round Fabric Ducts w/nozzles

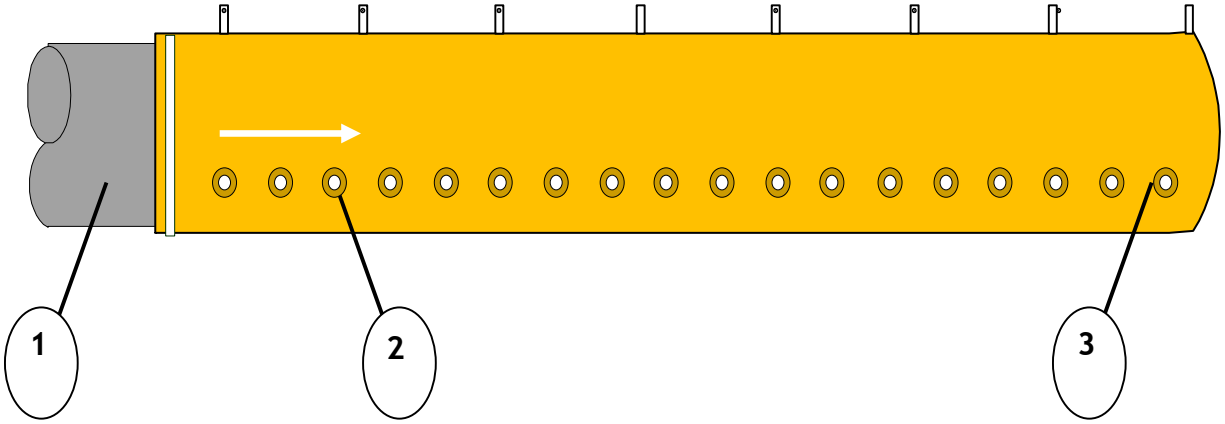

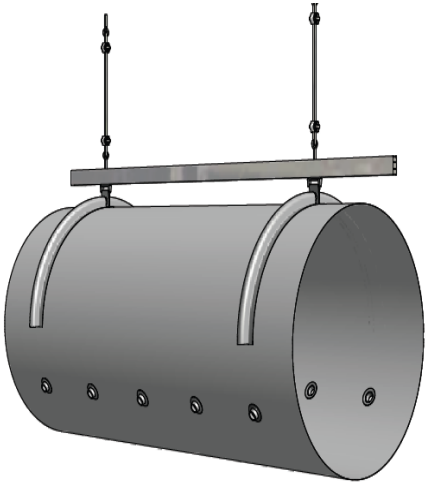

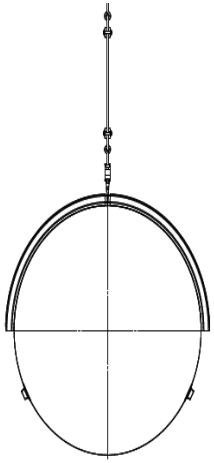

Recommended Values

1a. Max. inlet velocity 8,0 m/s (recommended 6 - 8 m/s)
1b. Pstat. ≥2,5xPdyn.
2. Pstat. min. 60 Pa
3. Recommended max. Pstat = 150 Pa

2013

Calculation

EXAMPLES

Basic rules for Perfo Ducts

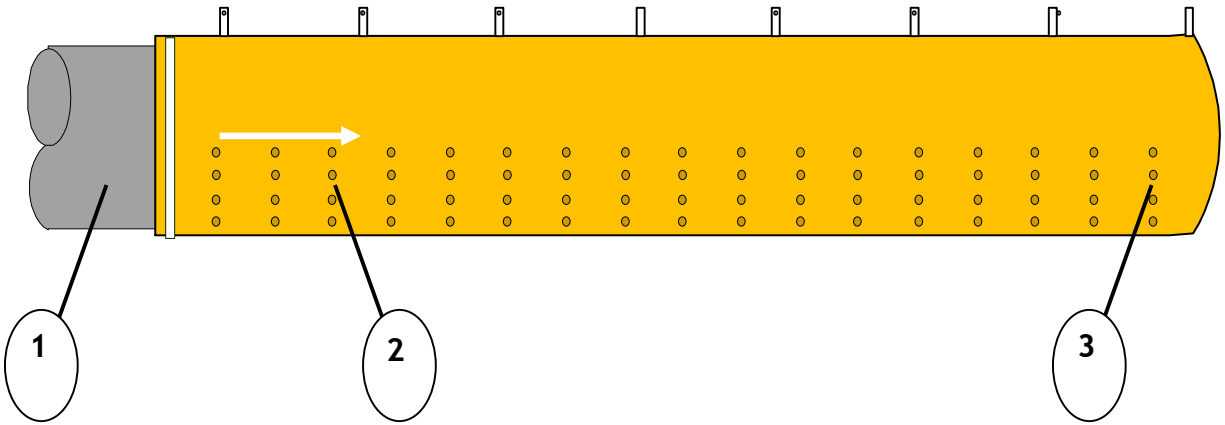

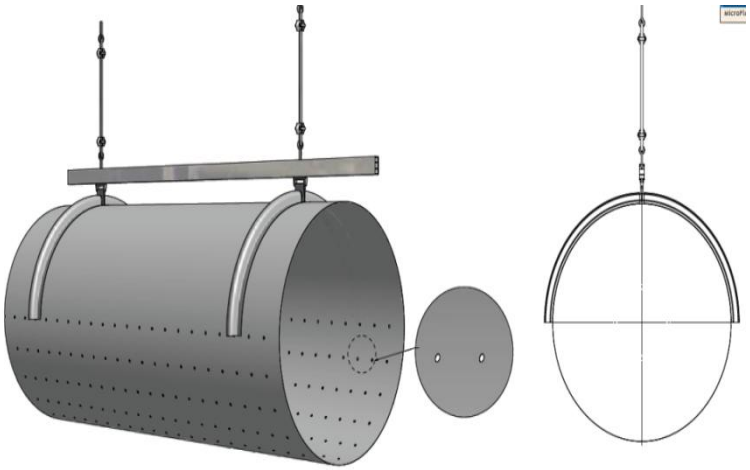

Recommended Values

1a. Max. inlet velocity 6,0 m/s (recommended 4 - 6 m/s)
1b. Pstat. ≥2,5xPdyn.
2. Pstat. min. 60 Pa
3. Recommended max. Pstat = 150 Pa

2013

Calculation

EXAMPLES

Air Distribution Pattern at Δt 0 - 5°C (Cooling)

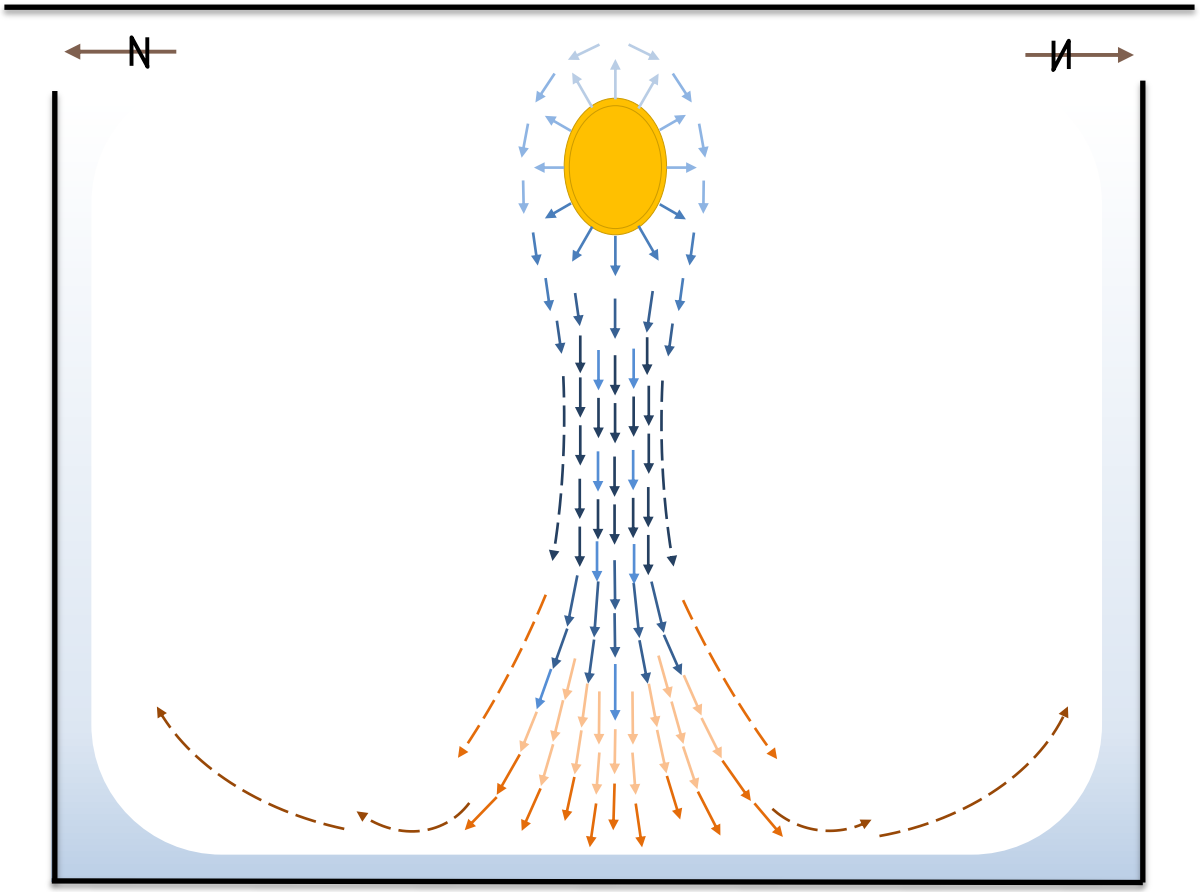

2013

Calculation

EXAMPLES

Air Discharge Pattern at
$\Delta t > 6^{\circ}C$ (Cooling)

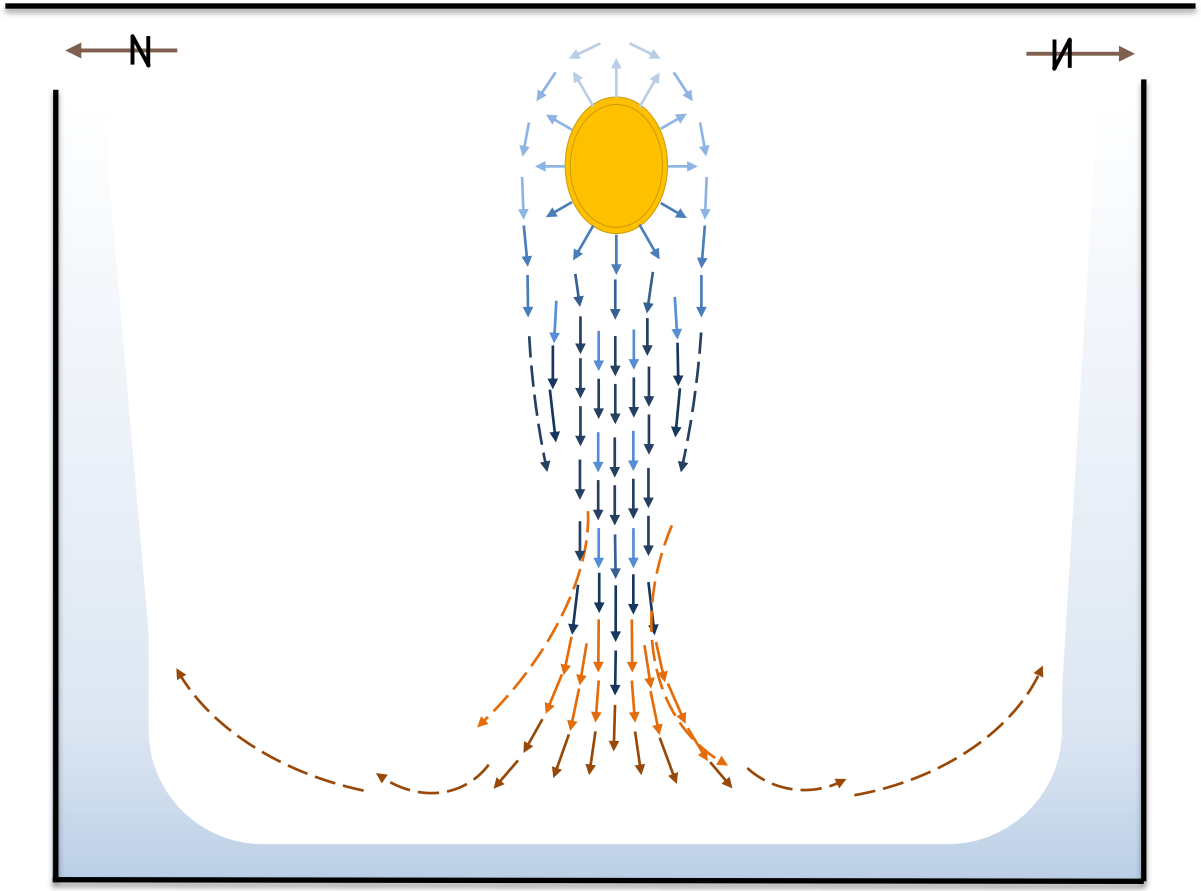

2013

Calculation

EXAMPLES

Air Discharge Pattern for Heated Air

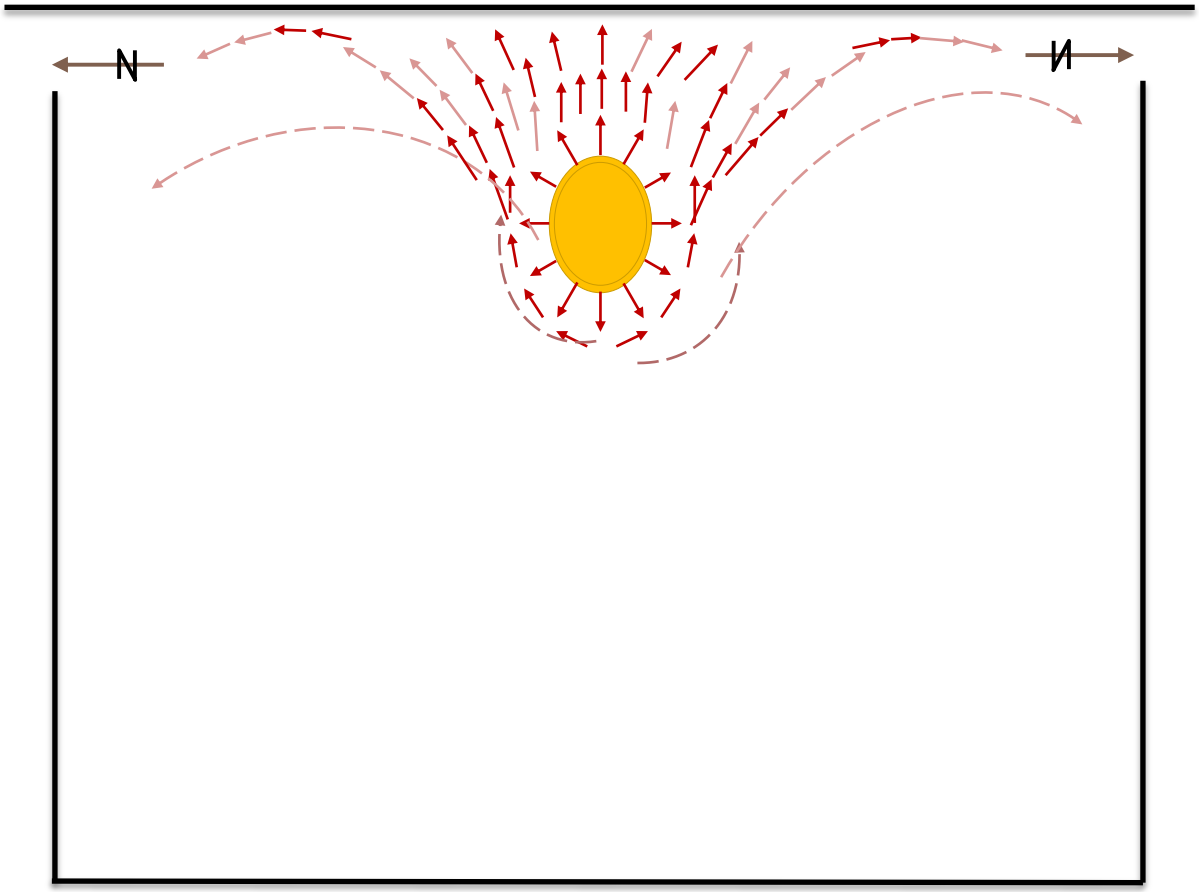

2013

Calculation

EXAMPLES

Distance between Ducts

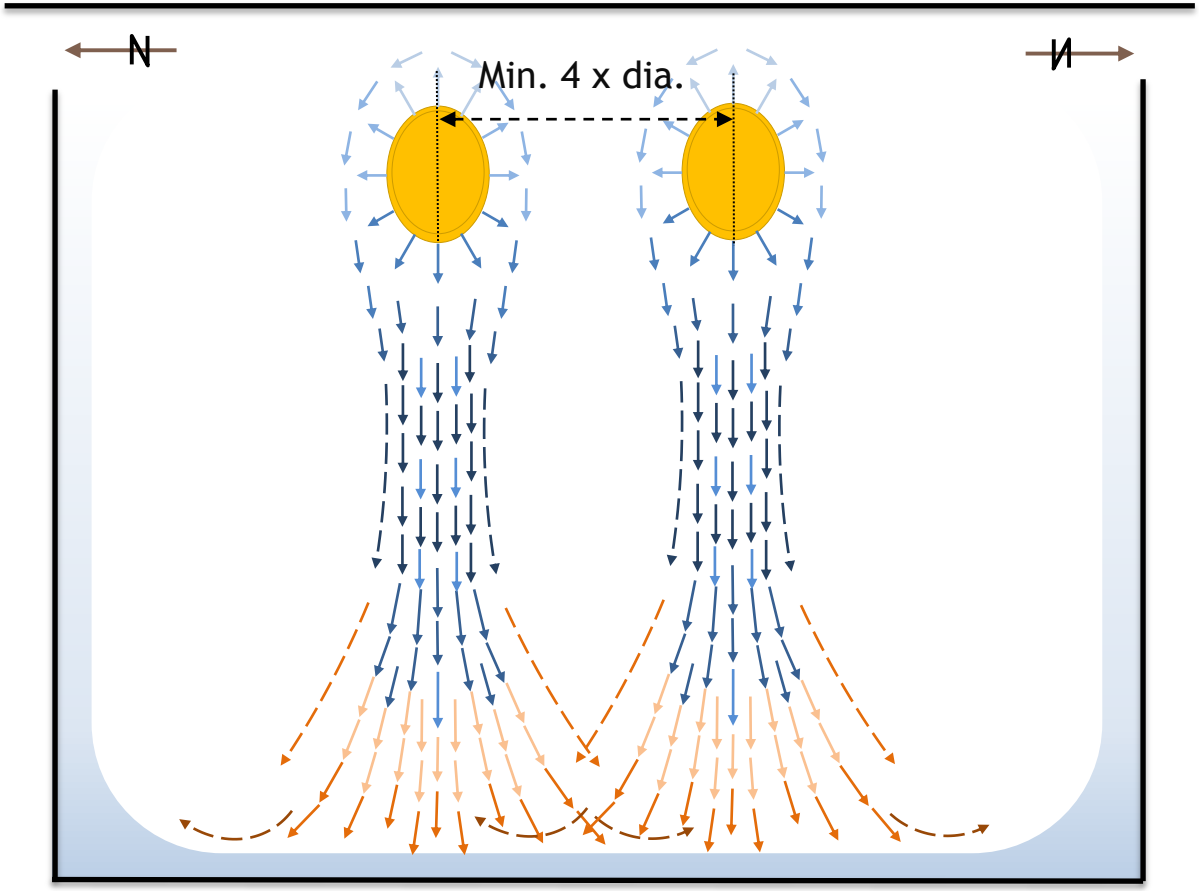

2013

Calculation

EXAMPLES

Wrong Distance between Ducts

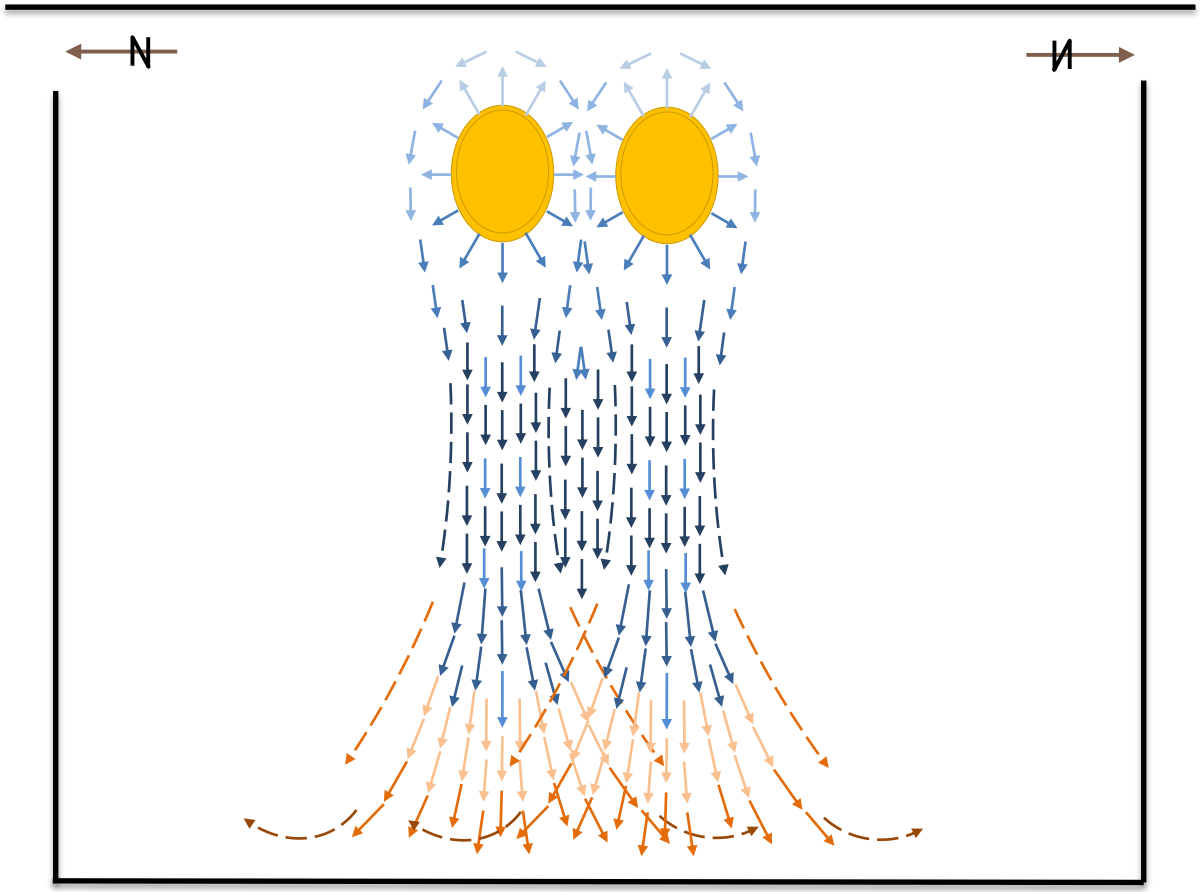

2013

Calculation

EXAMPLES

Distance from Fabric Ducts to Exhaust Outlet

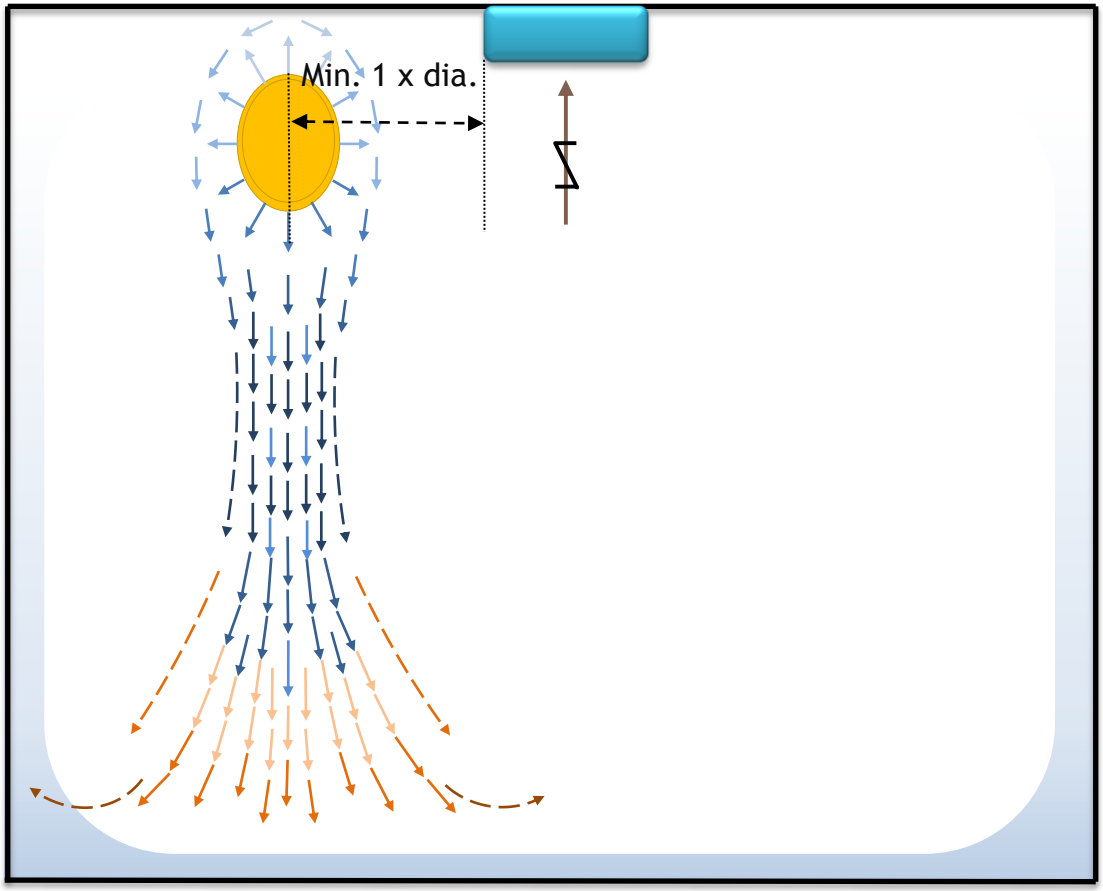

2013

Calculation

EXAMPLES

Fabric Ducts and strong Heat Sources