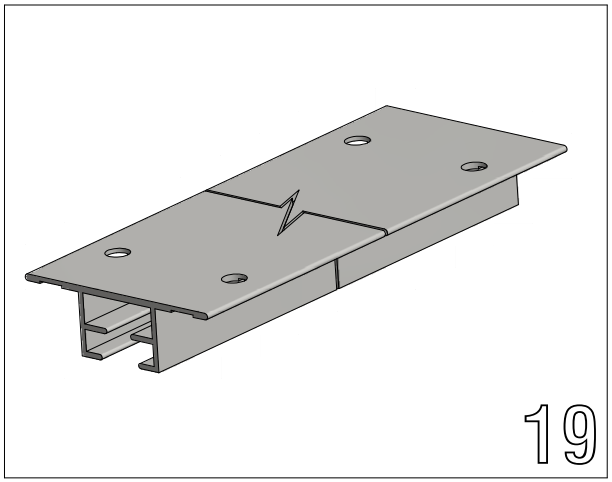
19

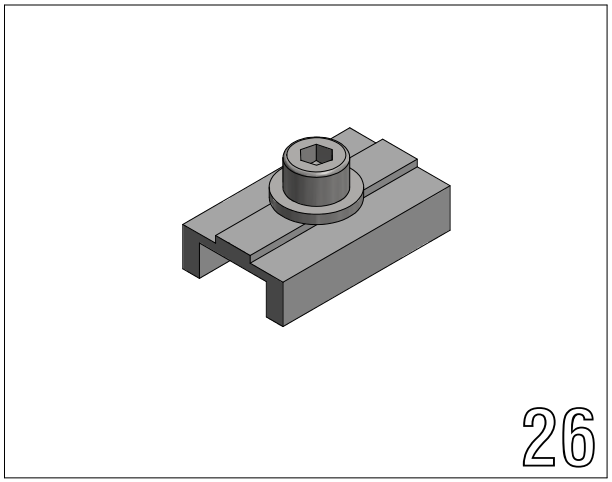
26

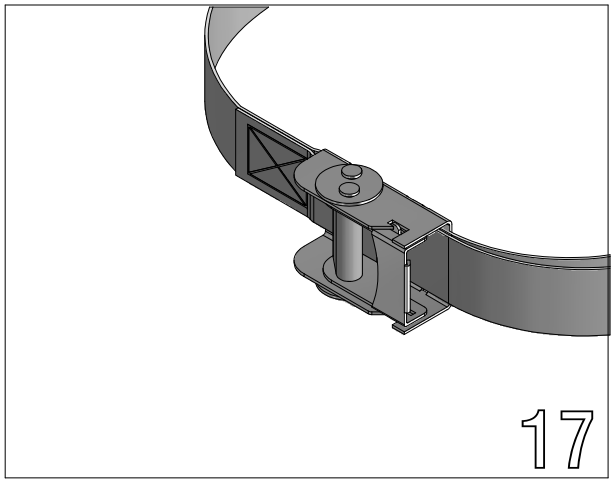
17

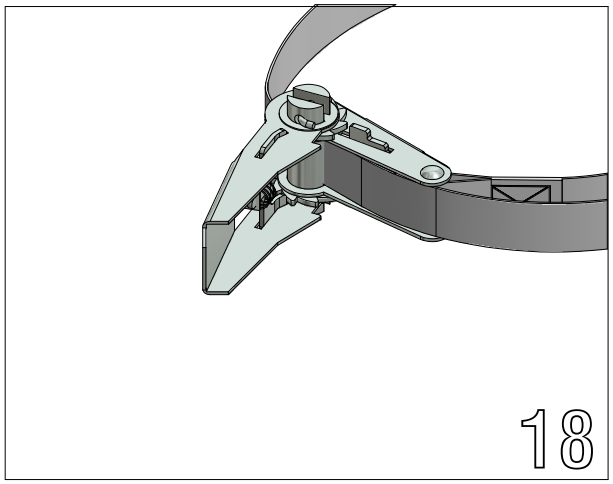
18

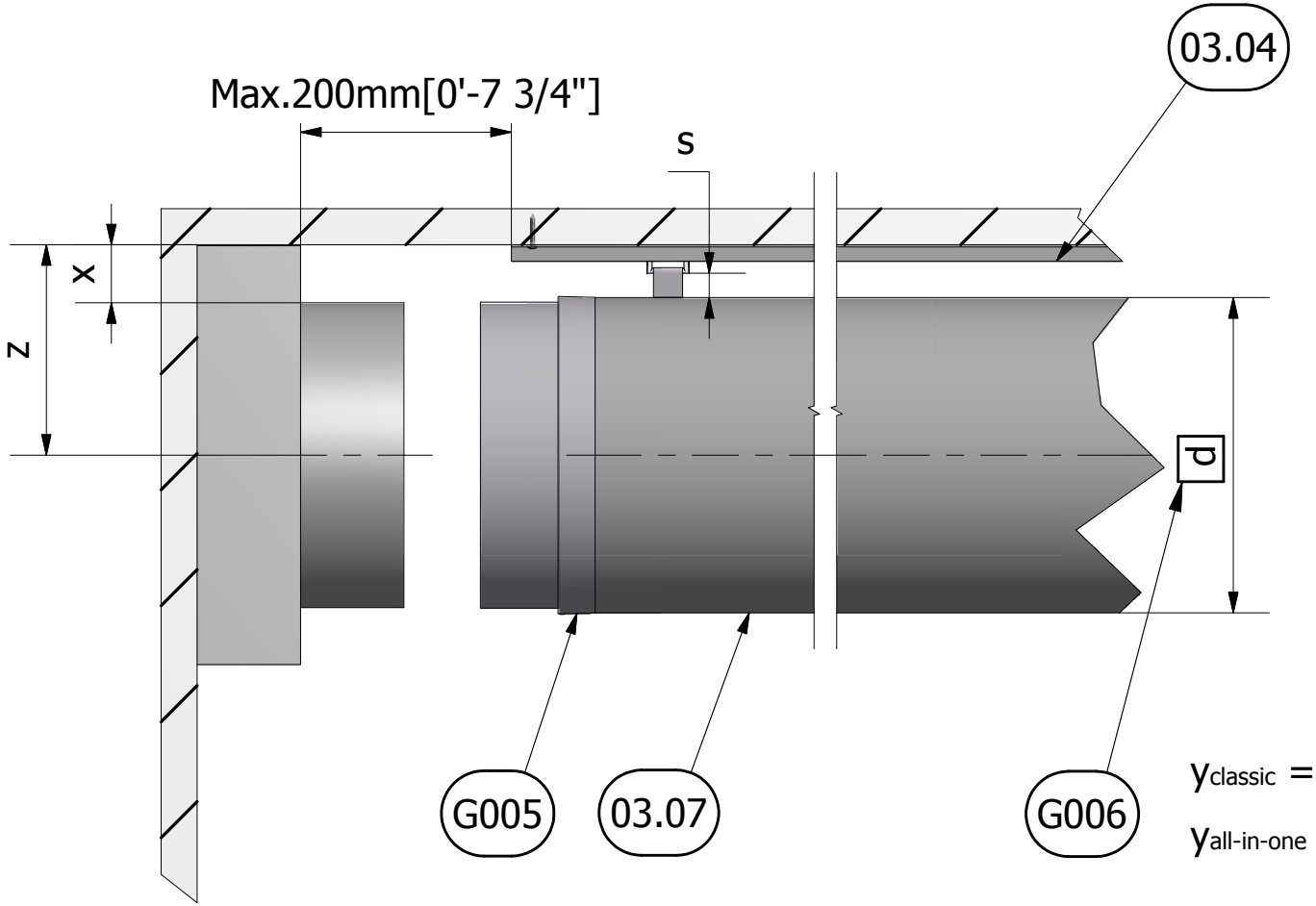

$y_{classic}$ = 40 mm[1.57"]

$y_{all\text{-}in\text{-}one}$ = 60 mm[2.36"]

$z_{classic}$ = ½ d + 40mm[1.57"]

$z_{all\text{-}in\text{-}one}$ = ½ d +60mm[2.36"]

$s_{classic}$ = z - ½ d -10mm[0.4"]

$s_{all\text{-}in\text{-}one}$ = z - ½ d -10mm[0.4"]

$s_{classic\ min}$ = 30mm[1.18"]

$s_{all\text{-}in\text{-}one\ min}$ = 50mm[1.96"]

03.02

Type 3
FabricAir® Installation Drawing
2003-0302-000 (2015-JUN)

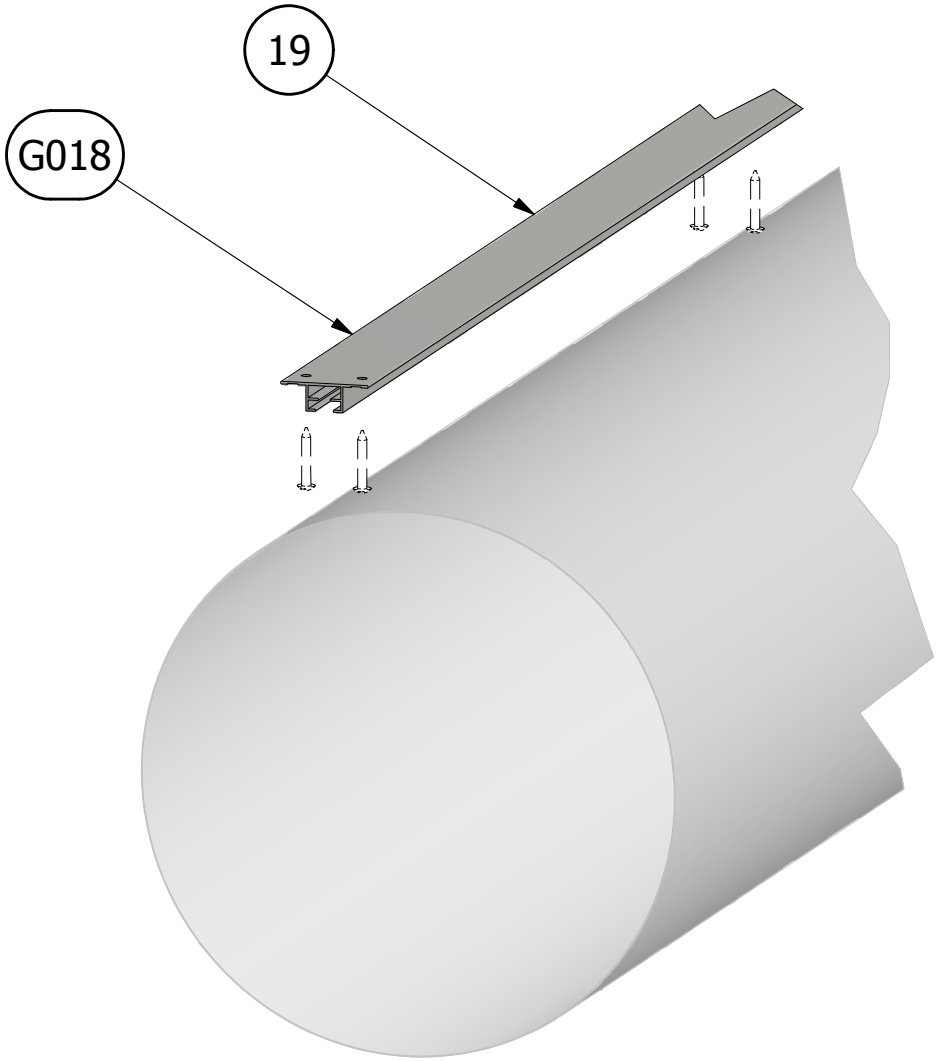

03.03

Type 3
FabricAir® Installation Drawing
2003-0303-000 (2014-FEB)

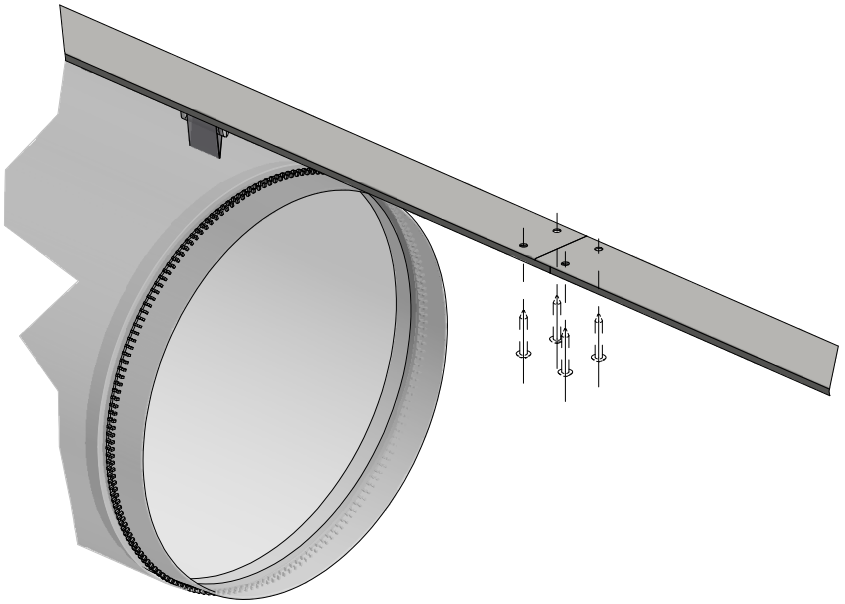

1

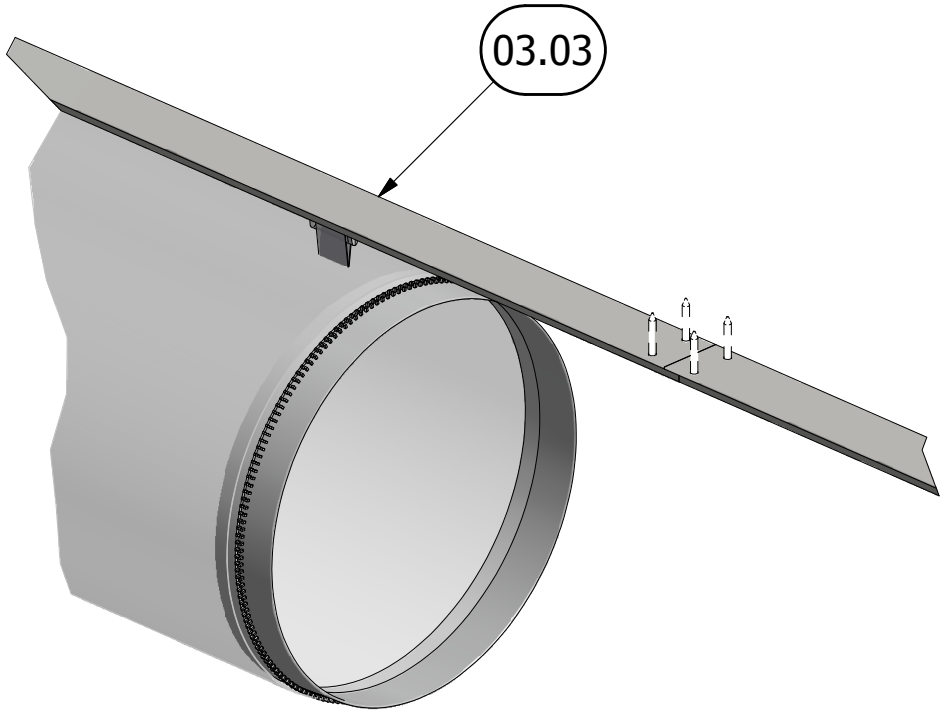

2

03.04

Type 3

FabricAir® Installation Drawing

2003-0304-000 (2014-FEB)

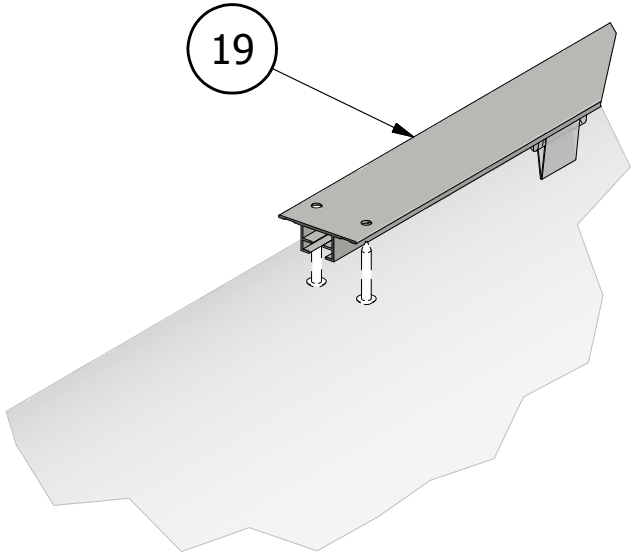

1

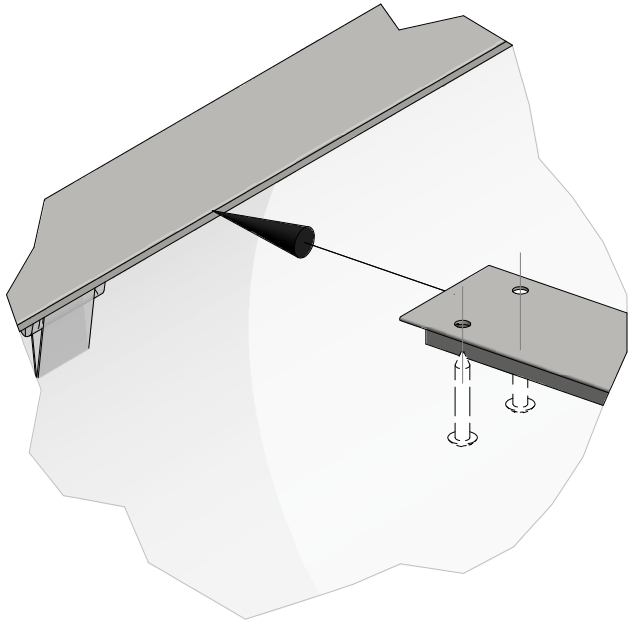

2

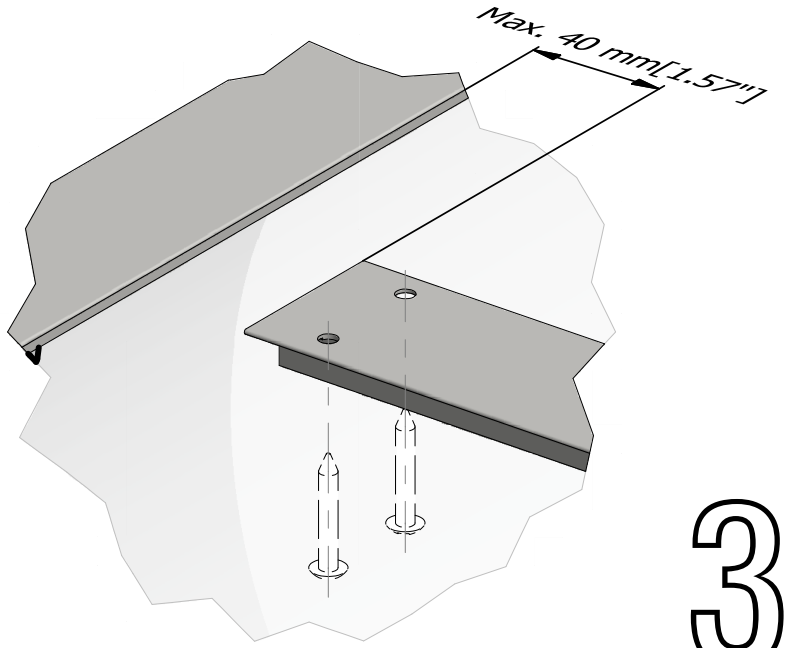

3

03.05

Type 3
FabricAir® Installation Drawing
2003-0305-000 (2014-FEB)

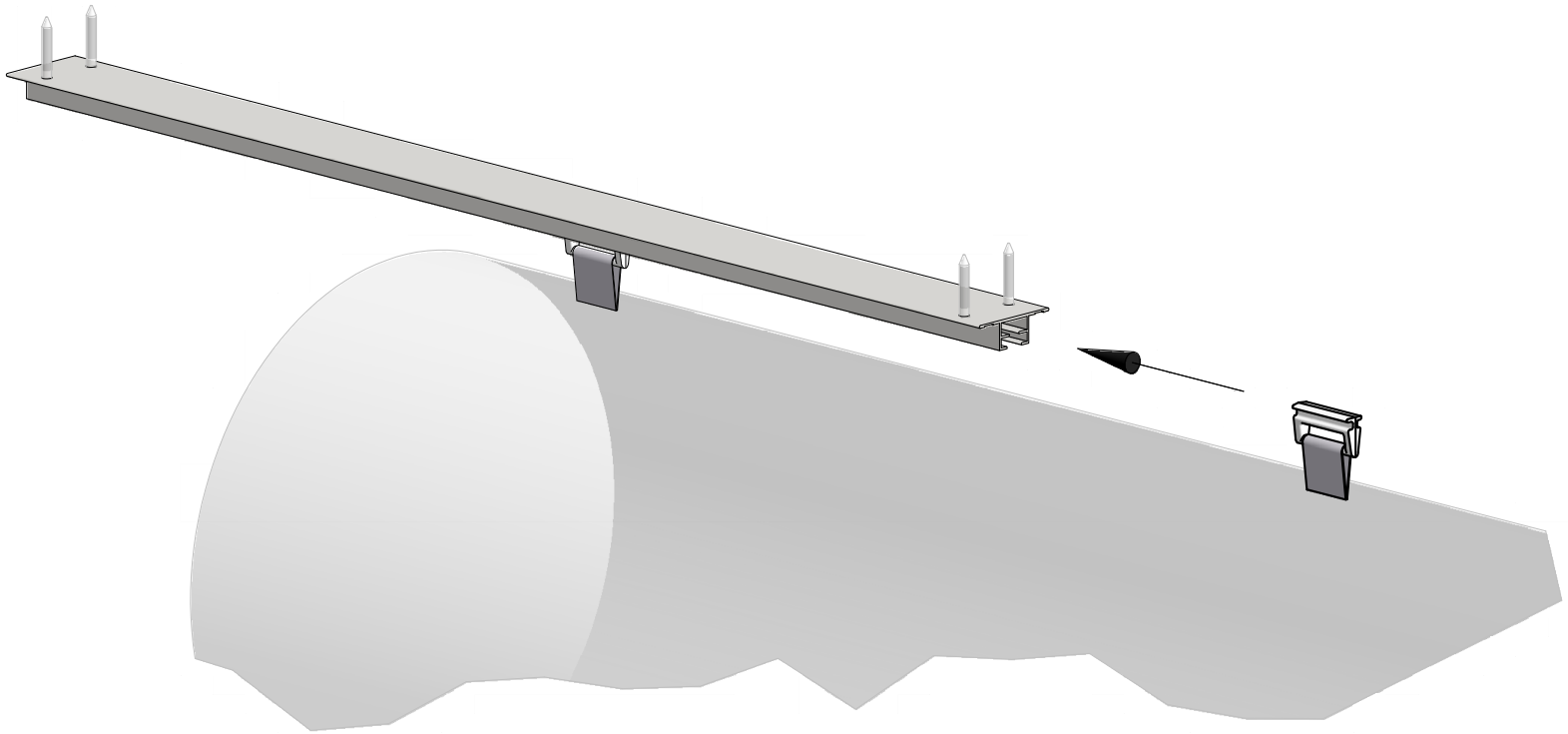

03.06

Type 3
FabricAir® Installation Drawing
2003-0306-000 (2014-FEB)

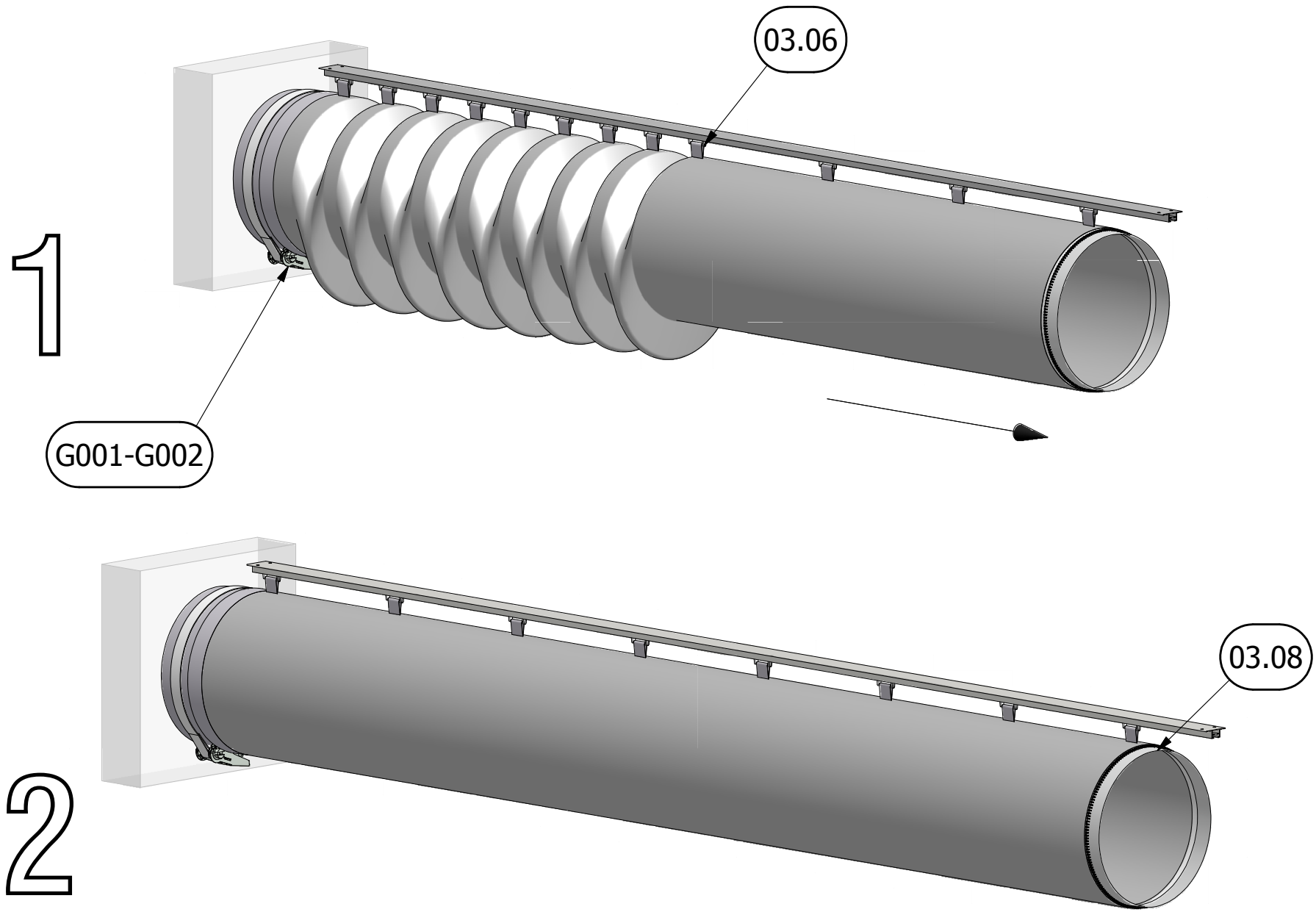

03.07

Type 3
FabricAir® Installation Drawing
2003-0307-000 (2014-FEB)

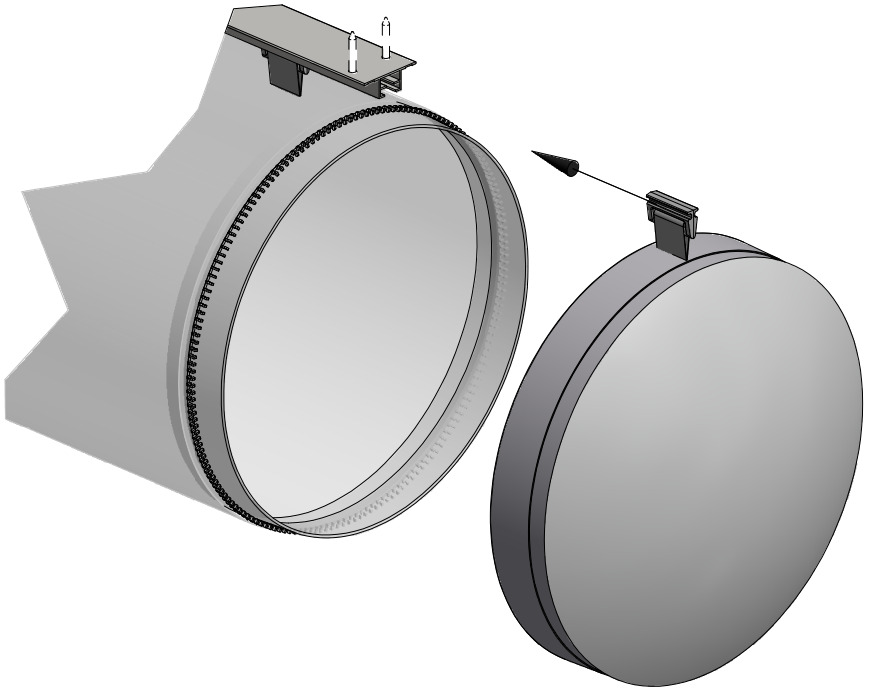

1

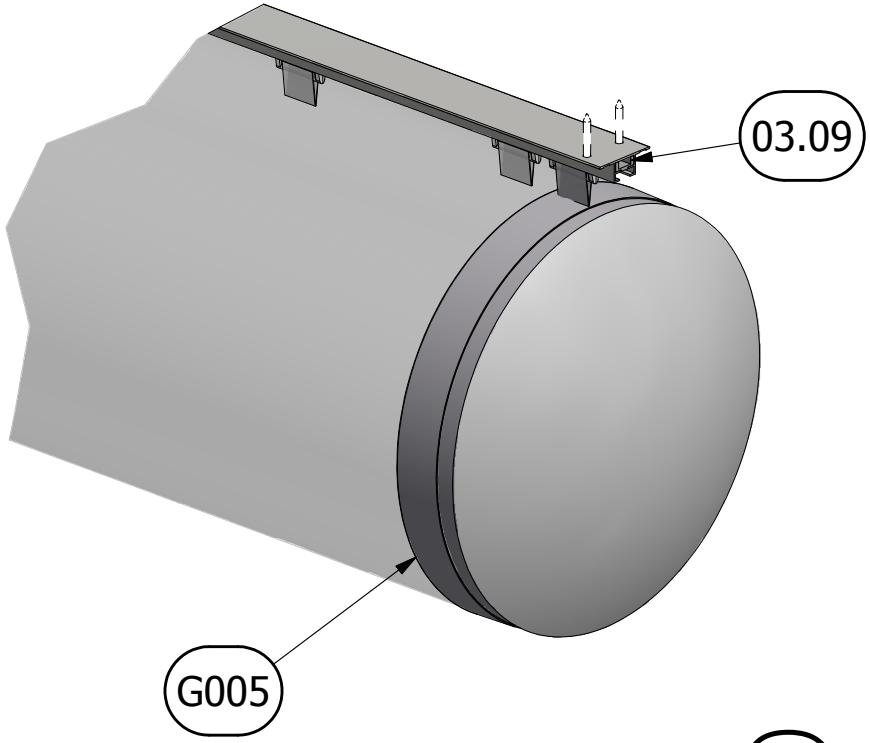

2

03.08

Type 3
FabricAir® Installation Drawing
2003-0308-000 (2014-FEB)

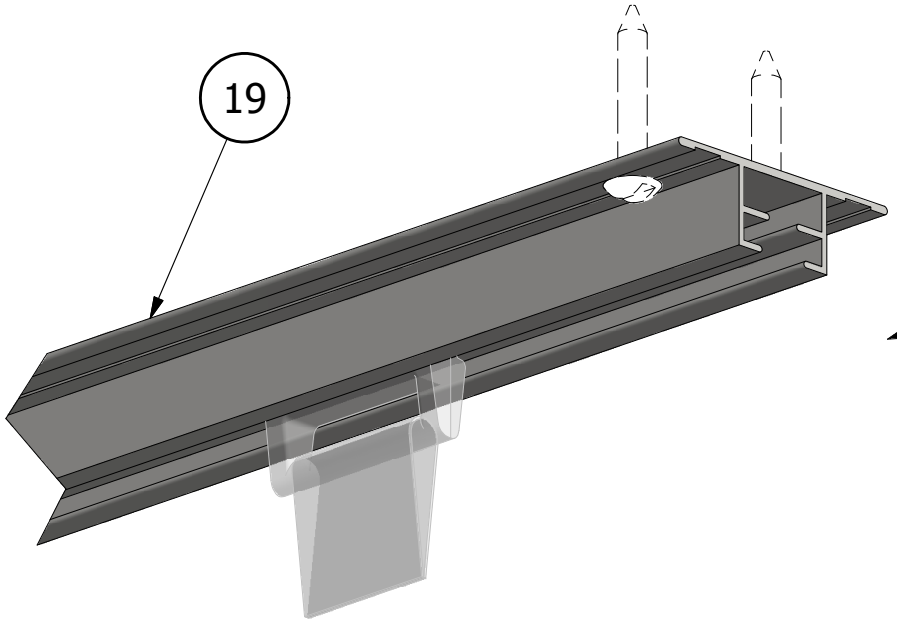

1

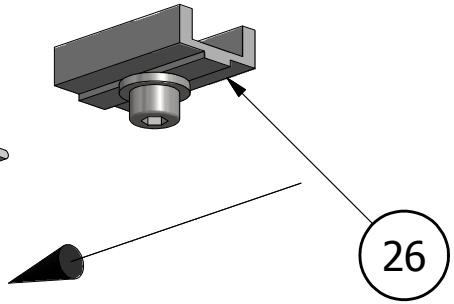

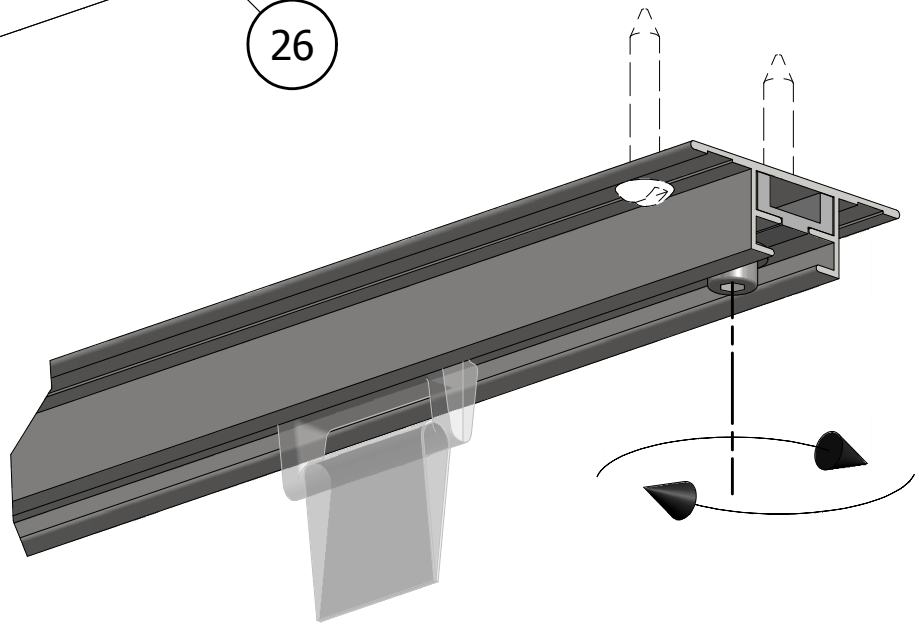

2

03.09

Type 3
FabricAir® Installation Drawing
2003-0309-000 (2014-FEB)

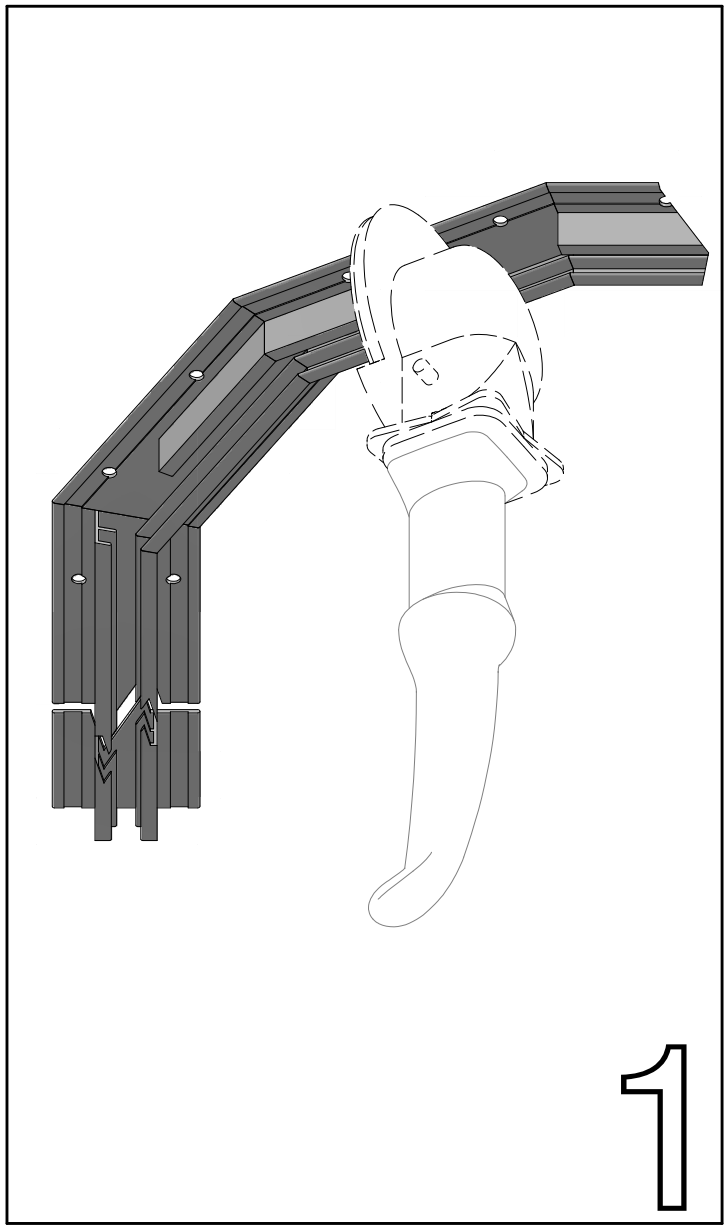

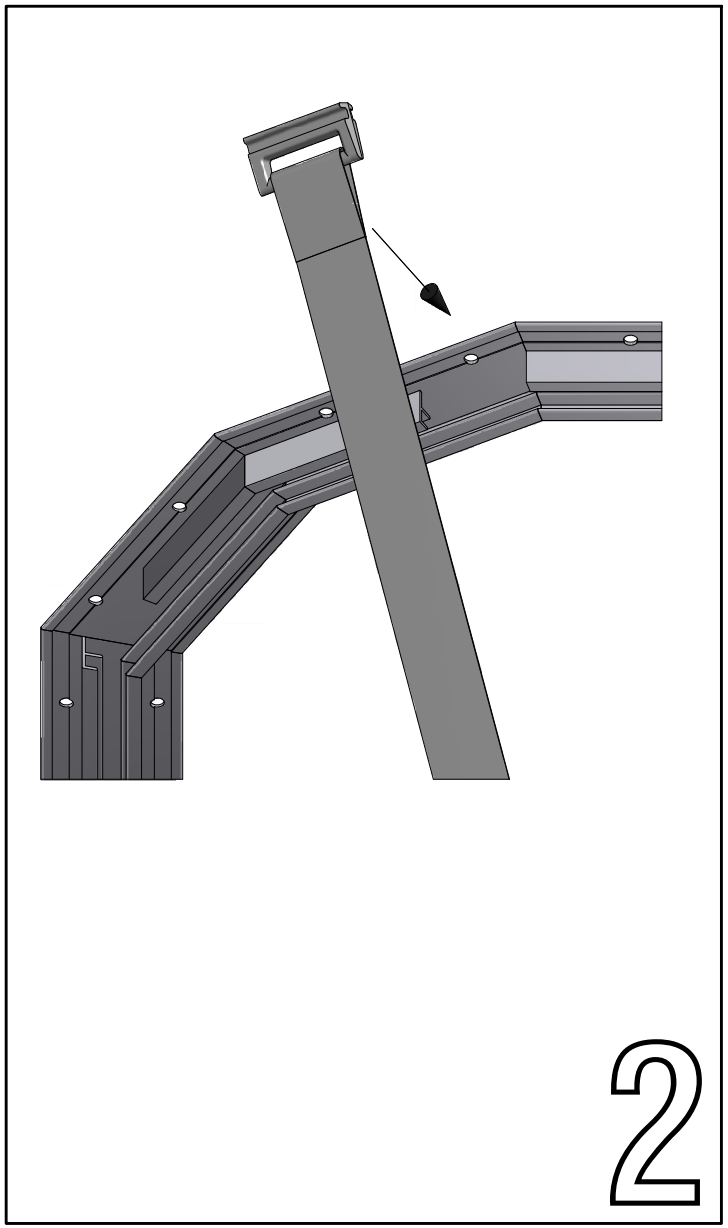

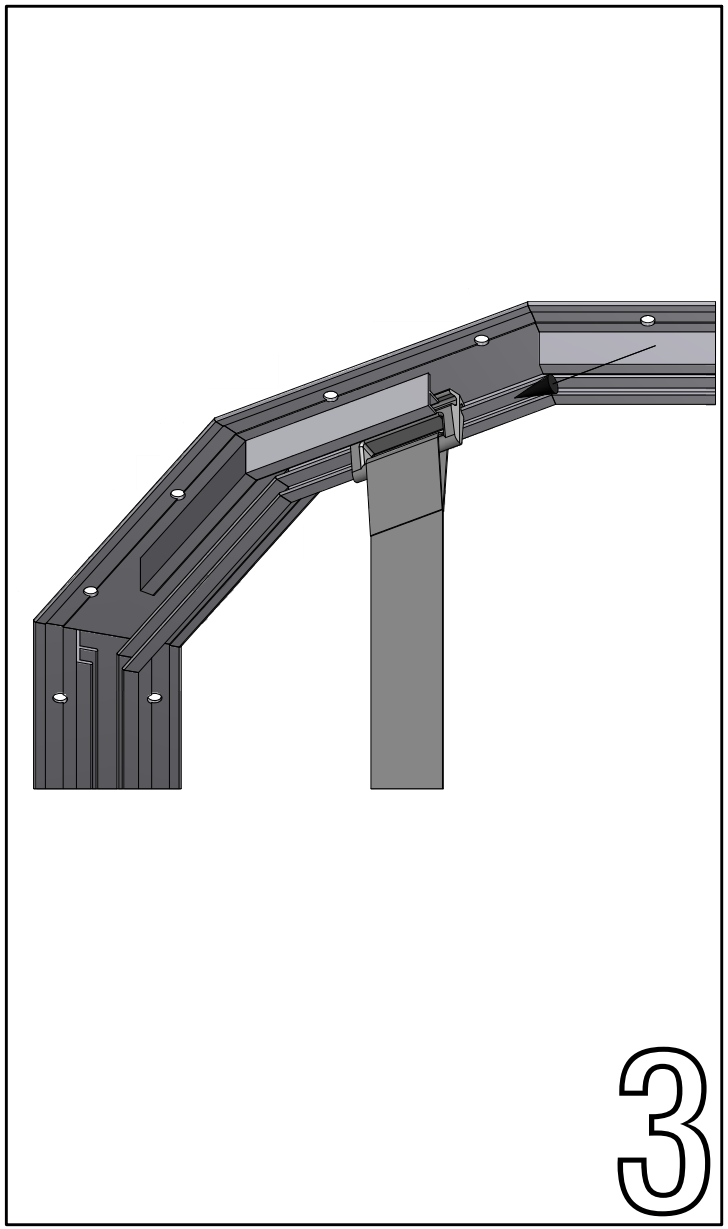

03.10

Type 3

FabricAir® Installation Drawing

2003-0310-000(2014-FEB)

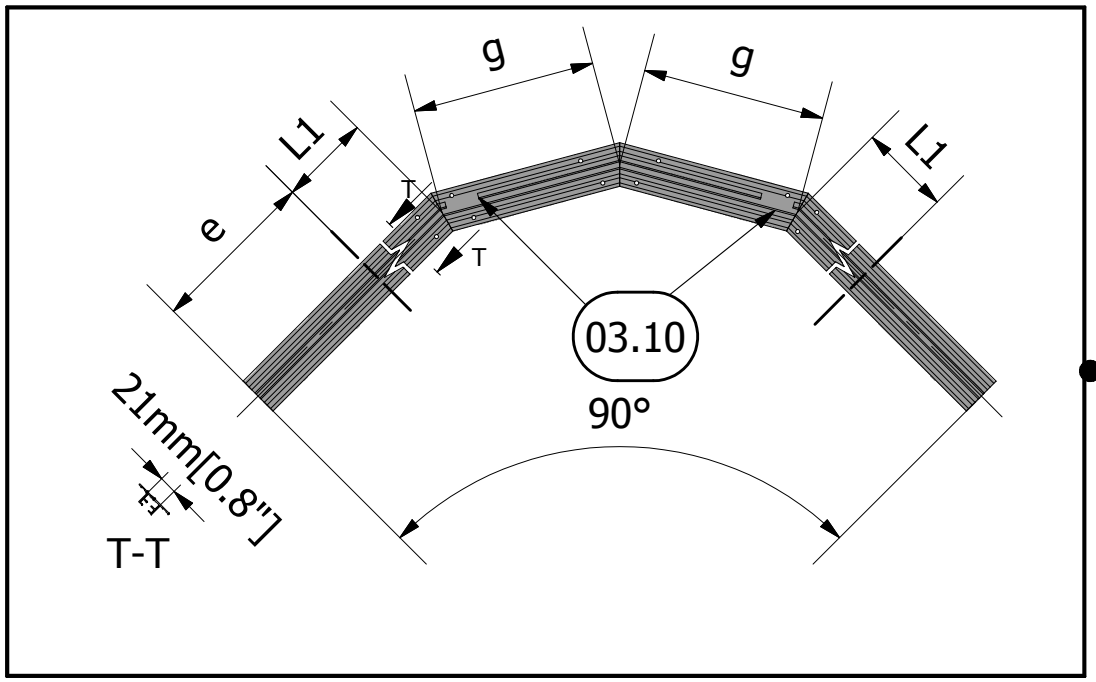

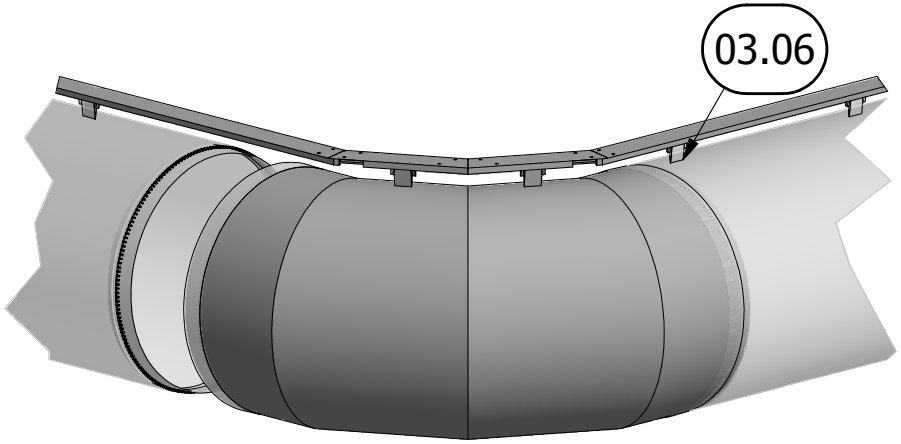

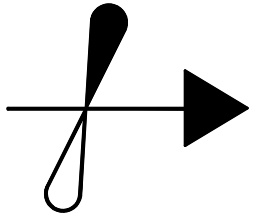

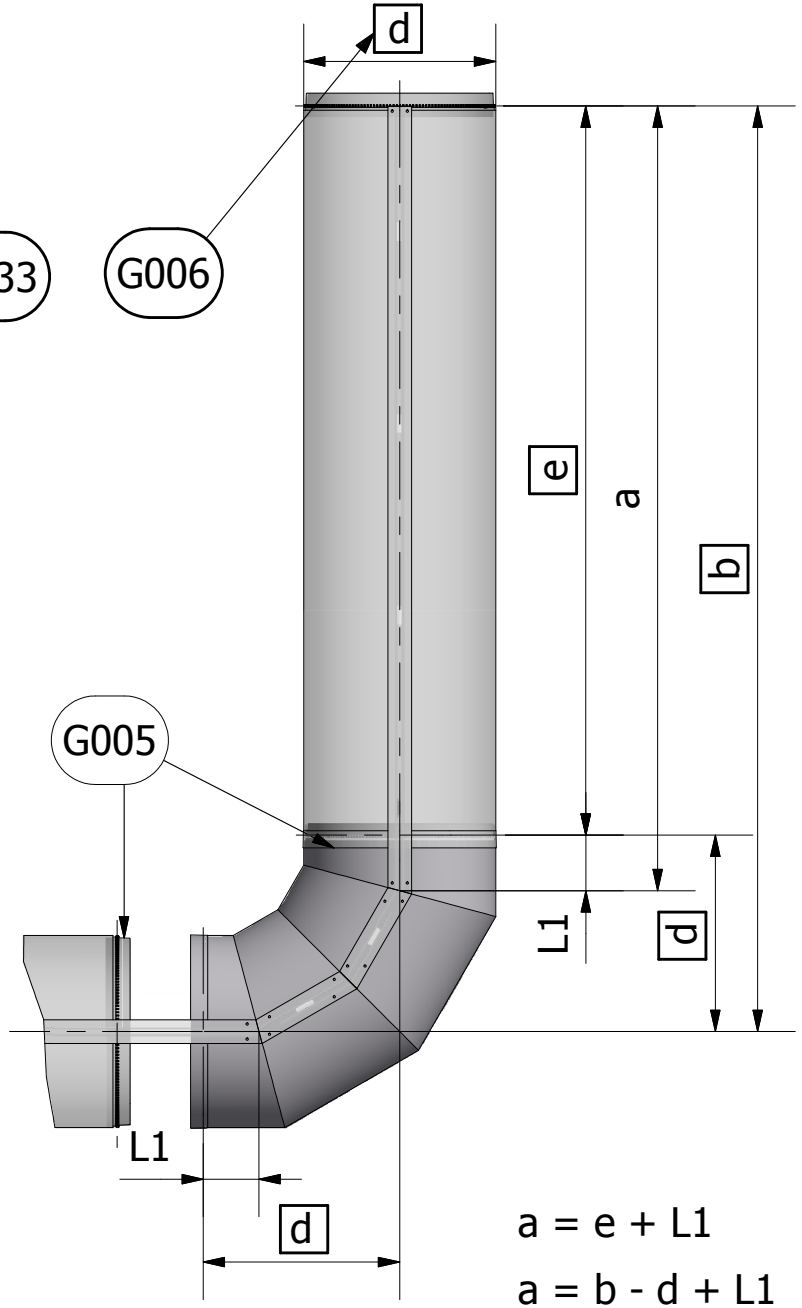

a = e + L1

a = b - d + L1

L1,g ⟶ 03.33

03.11

Type 3

FabricAir® Installation Drawing

2003-0311-000 (2014-FEB)

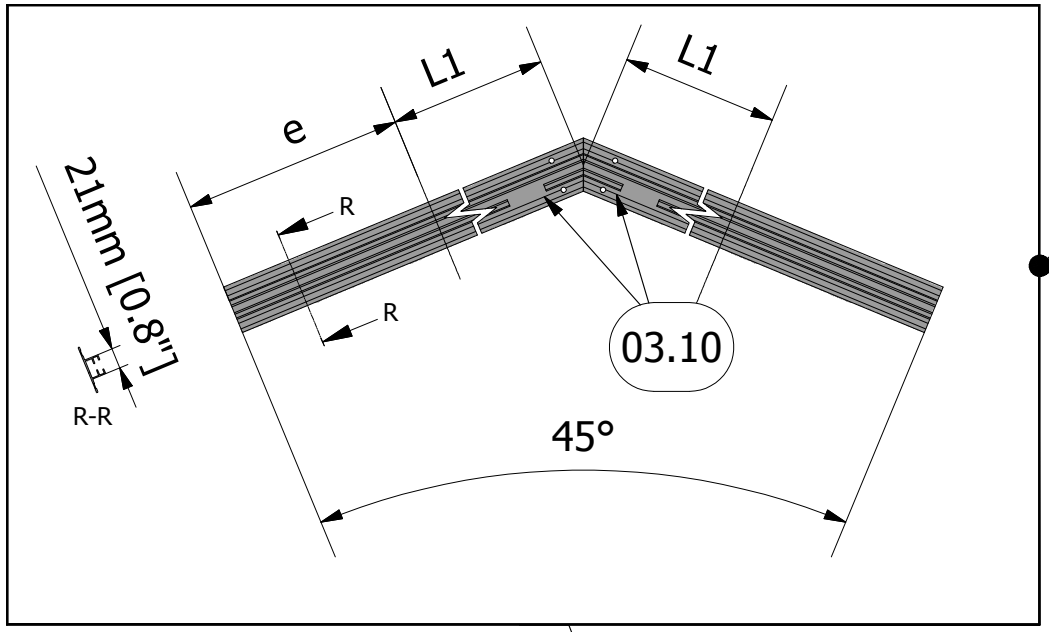

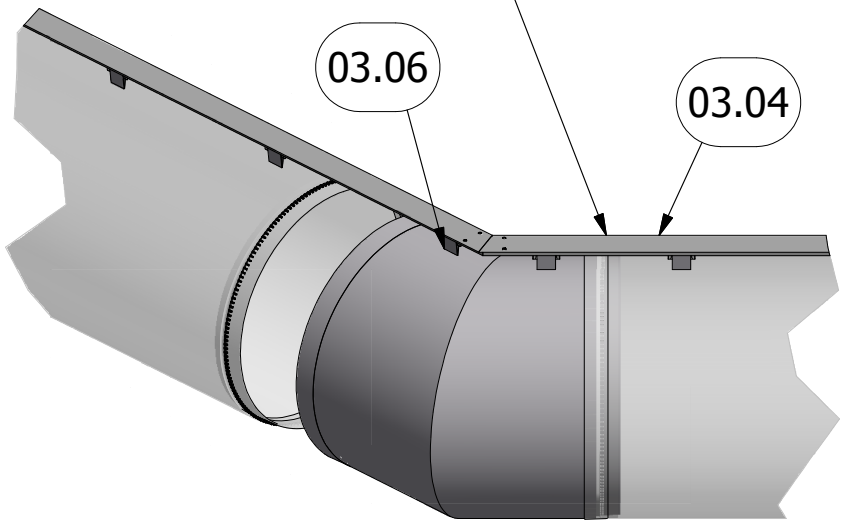

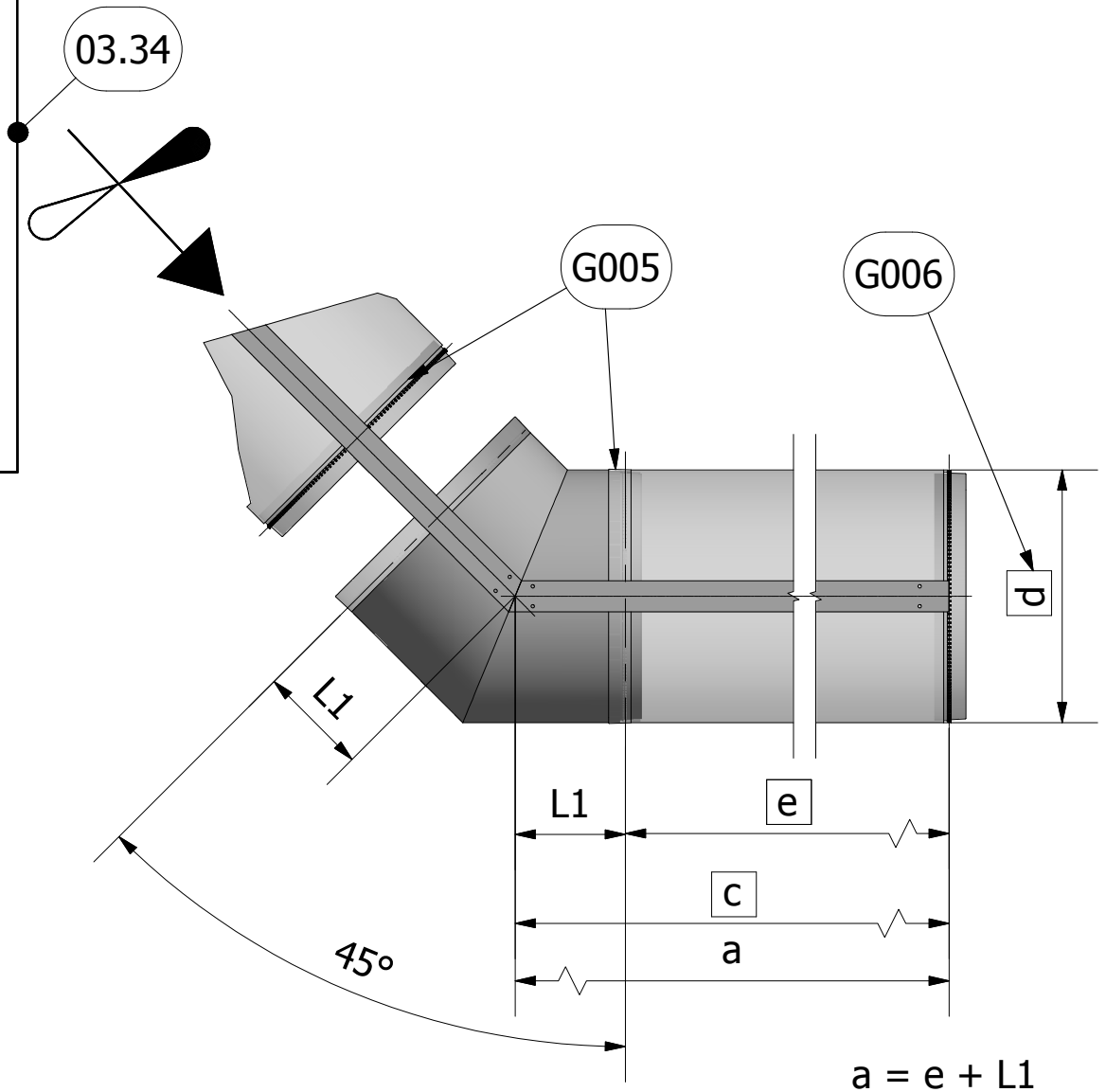

a = e + L1

a = c

L1⟶ 03.34

03.12

Type 3

FabricAir® Installation Drawing

2003-0312-000 (2014-FEB)

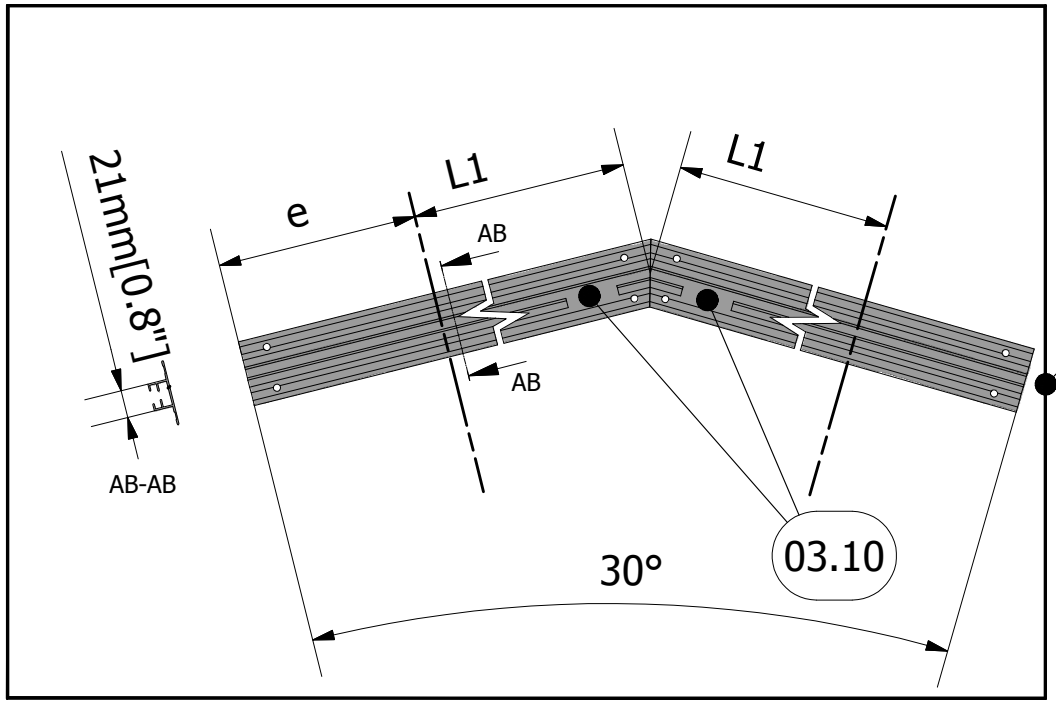

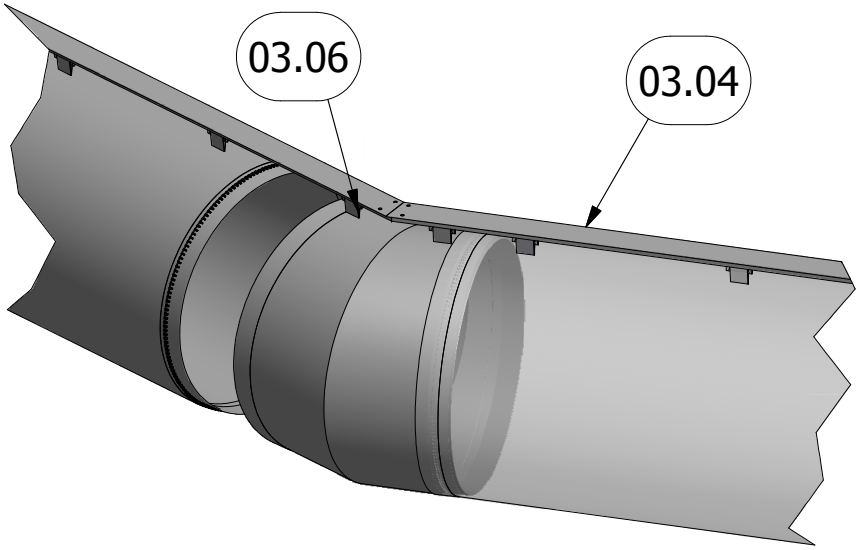

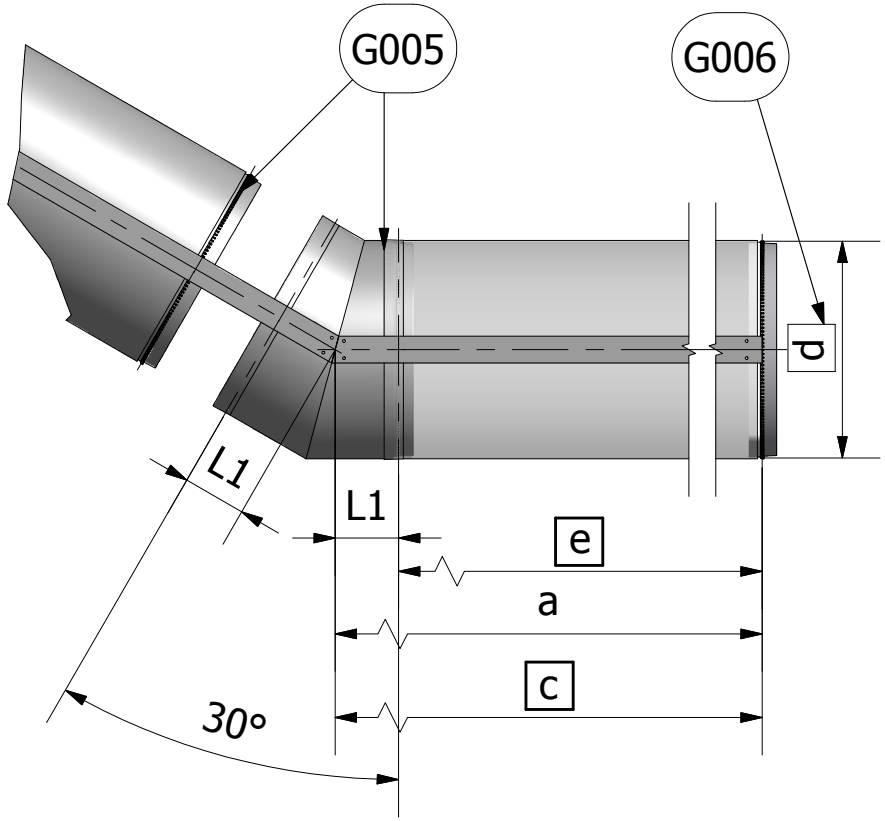

a = c

a = e + L1

L1⟶ 03.35

03.13

Type 3

FabricAir® Installation Drawing

2003-0313-000 (2014-FEB)

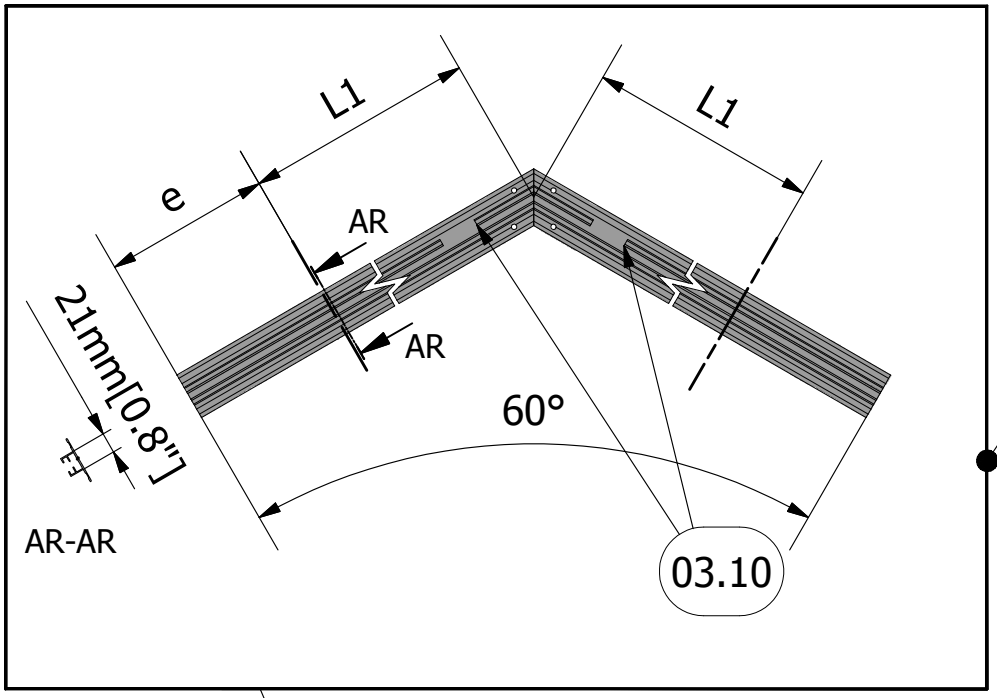

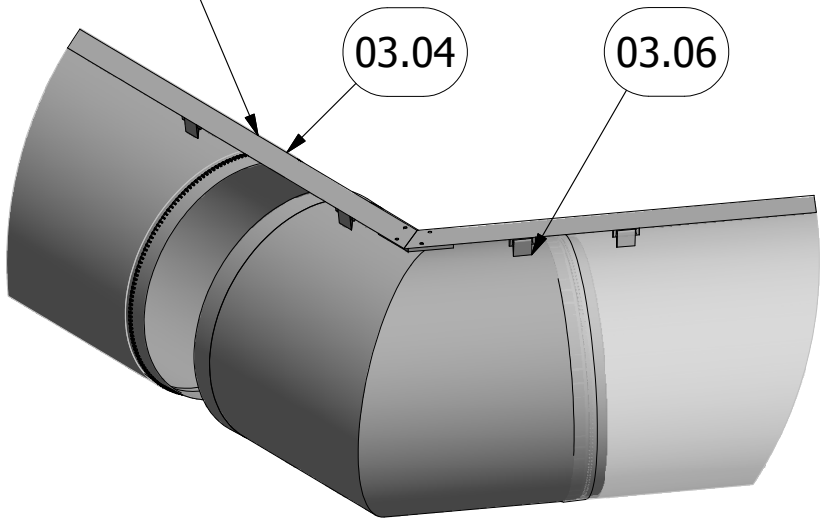

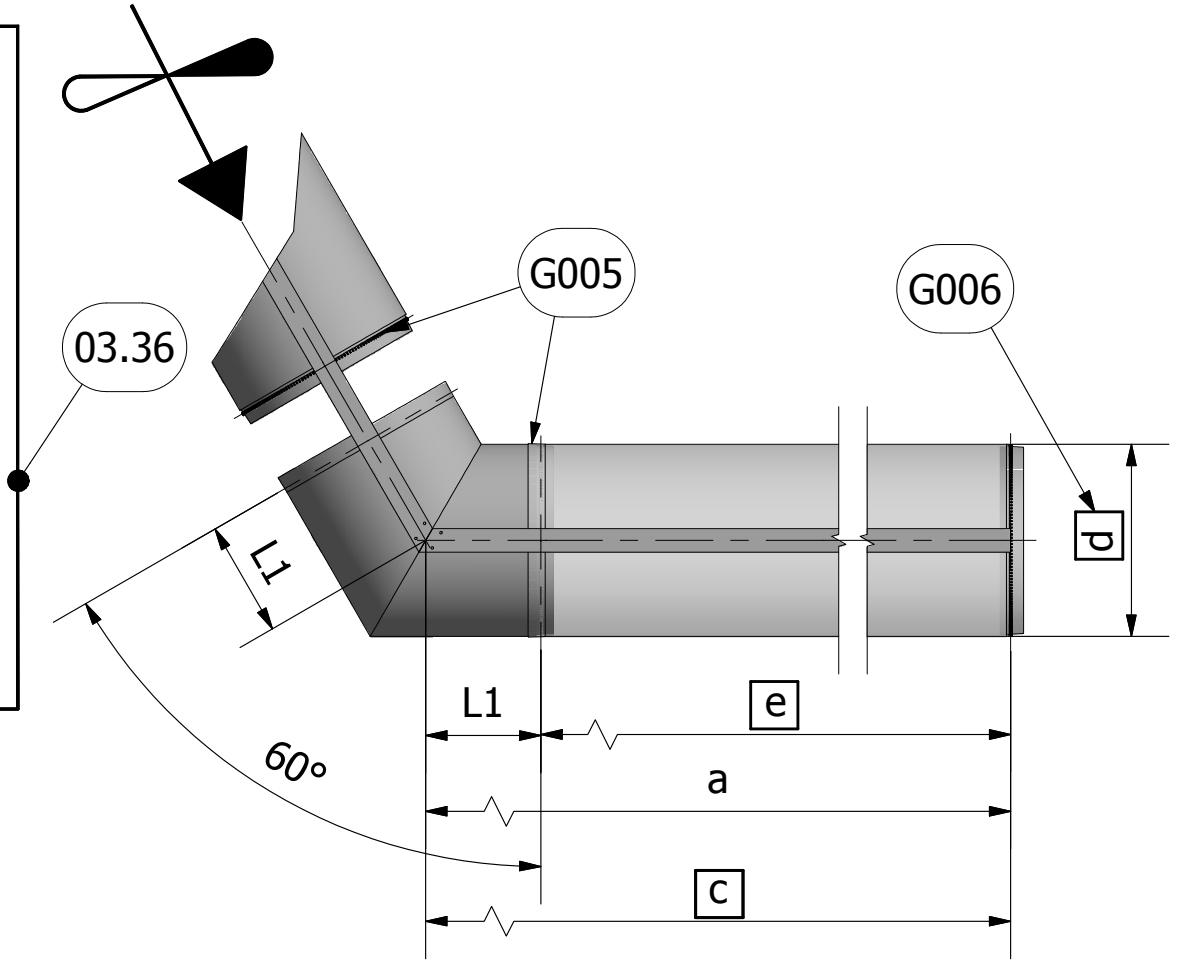

a = e + L1

a = c

L1⟶ 03.36

03.14

Type 3

FabricAir® Installation Drawing

2003-0314-000 (2014-FEB)

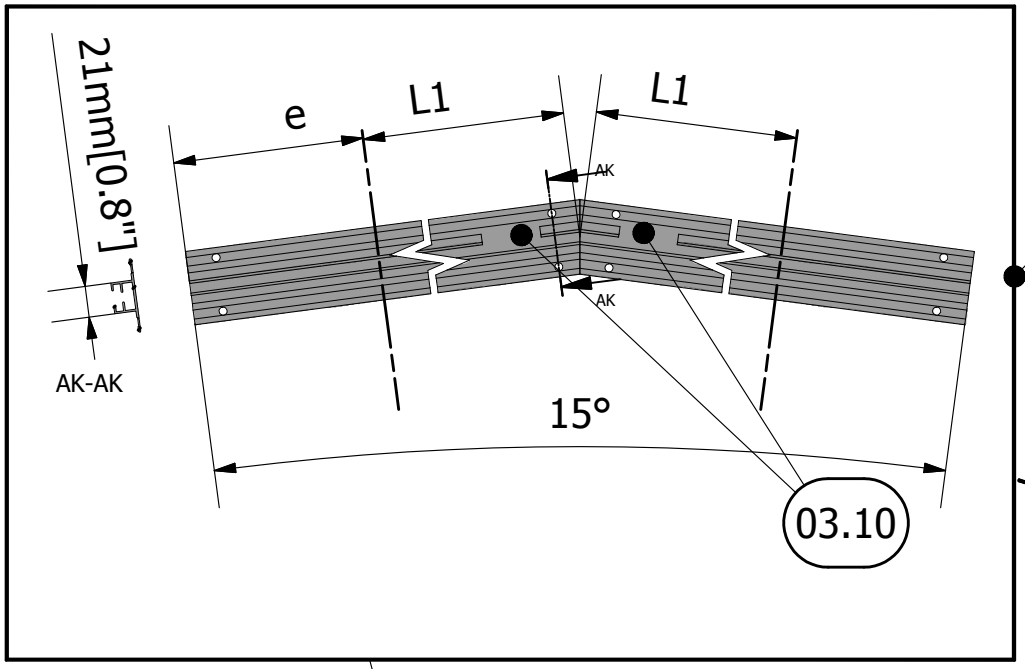

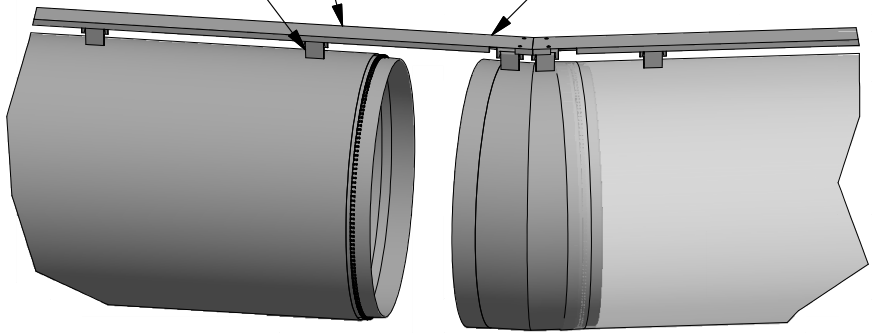

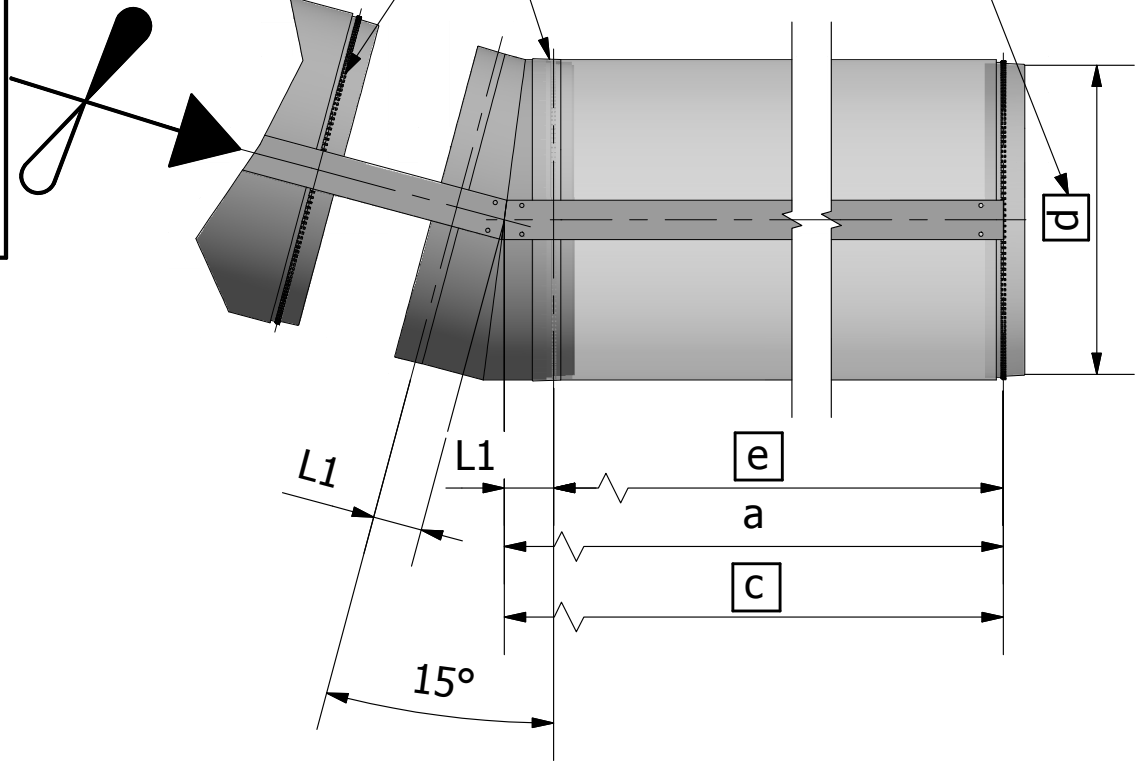

a = c

a = e + L1

L1⟶ 03.37

03.15

Type 3

FabricAir® Installation Drawing

2003-0315-000 (2014-FEB)

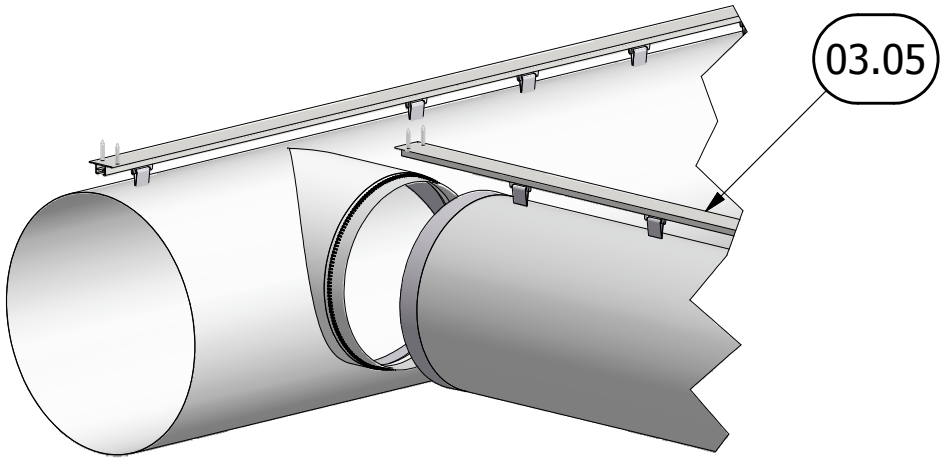

1

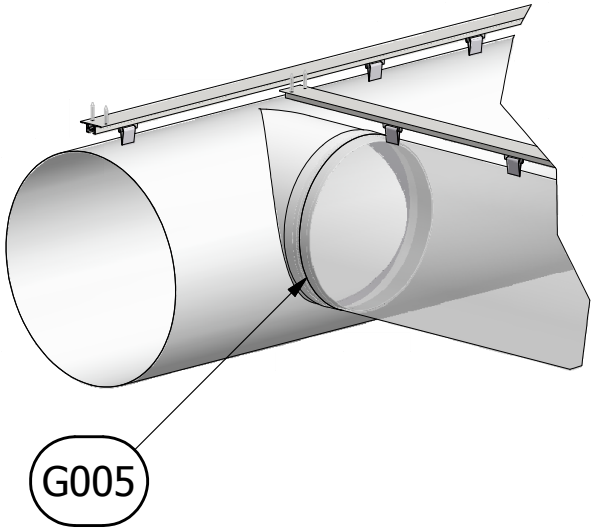

2

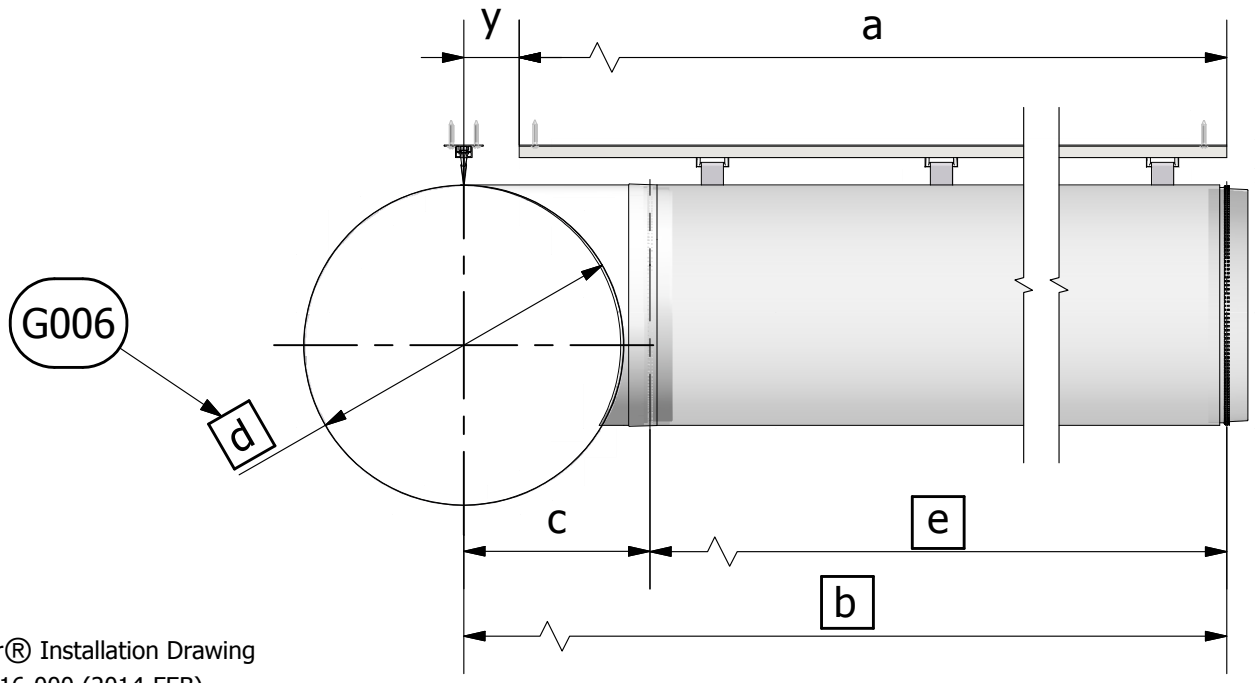

a = e + c - y

a = b - y

y = Max.65mm [2.56"]

c = ½ d + 35mm [1.38"]

03.16

Type 3

FabricAir® Installation Drawing

2003-0316-000 (2014-FEB)

1

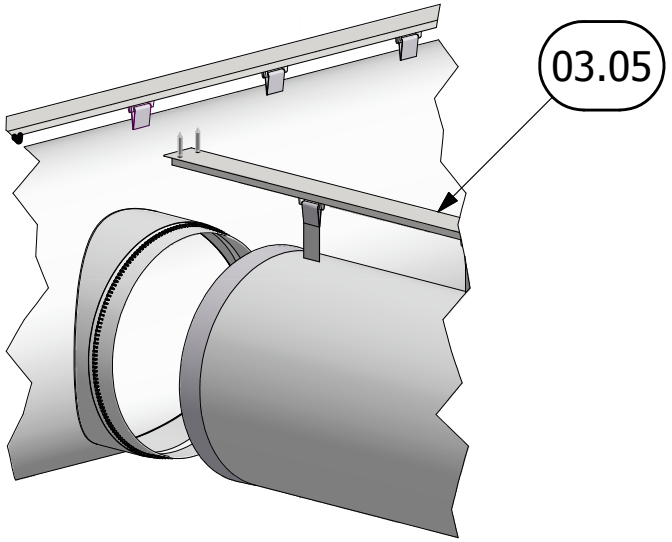

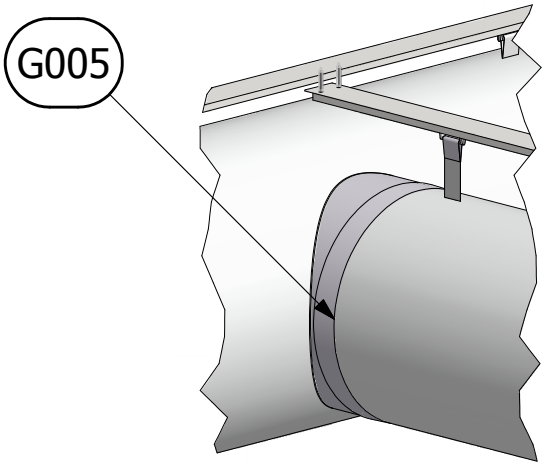

2

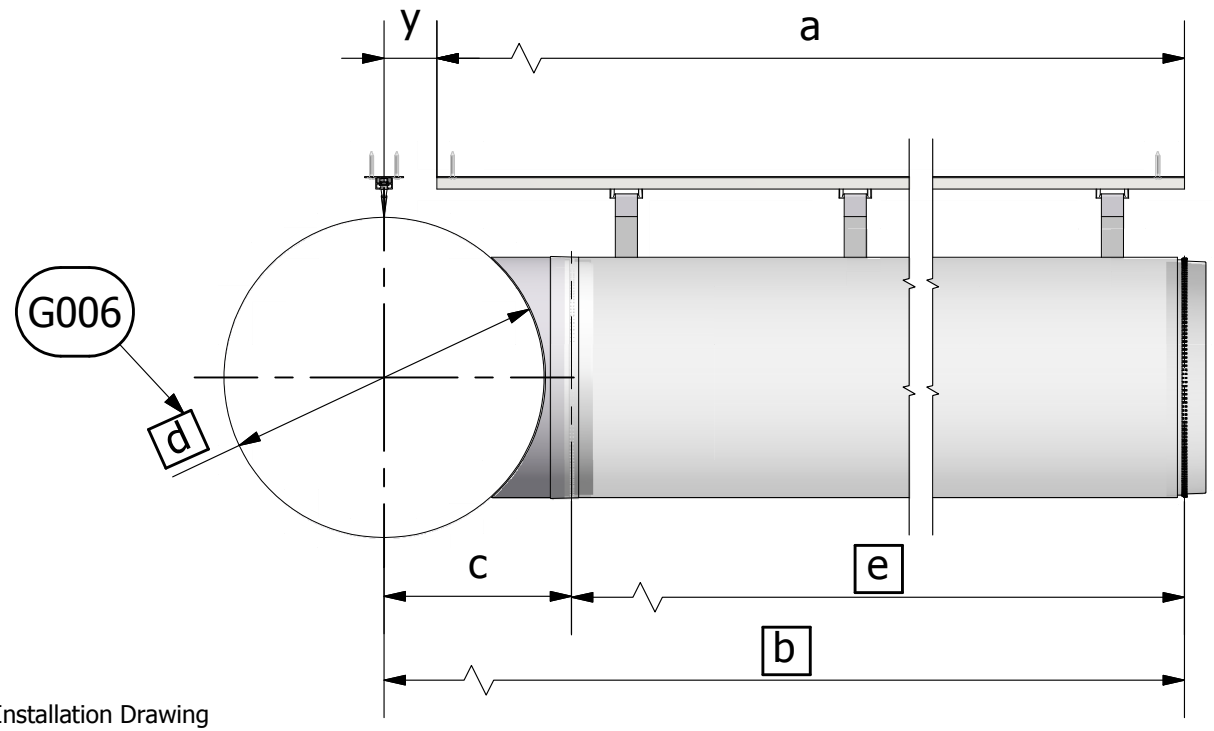

a = e + c - y

a = b - y

y = Max.65mm [2.56"]

c = ½ d + 35 mm[1.38"]

03.17

Type 3

FabricAir® Installation Drawing

2003-0317-000 (2014-FEB)

1

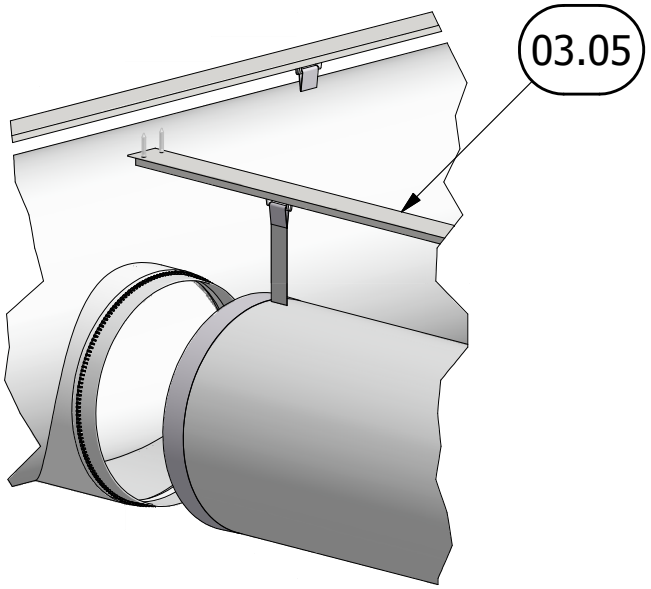

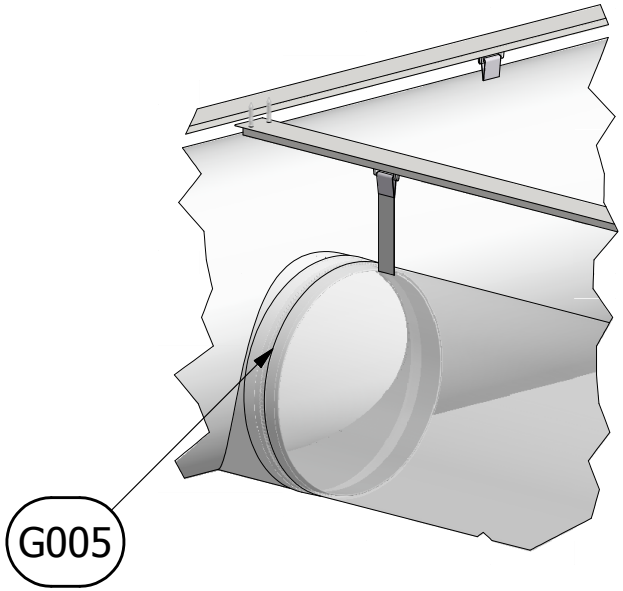

2

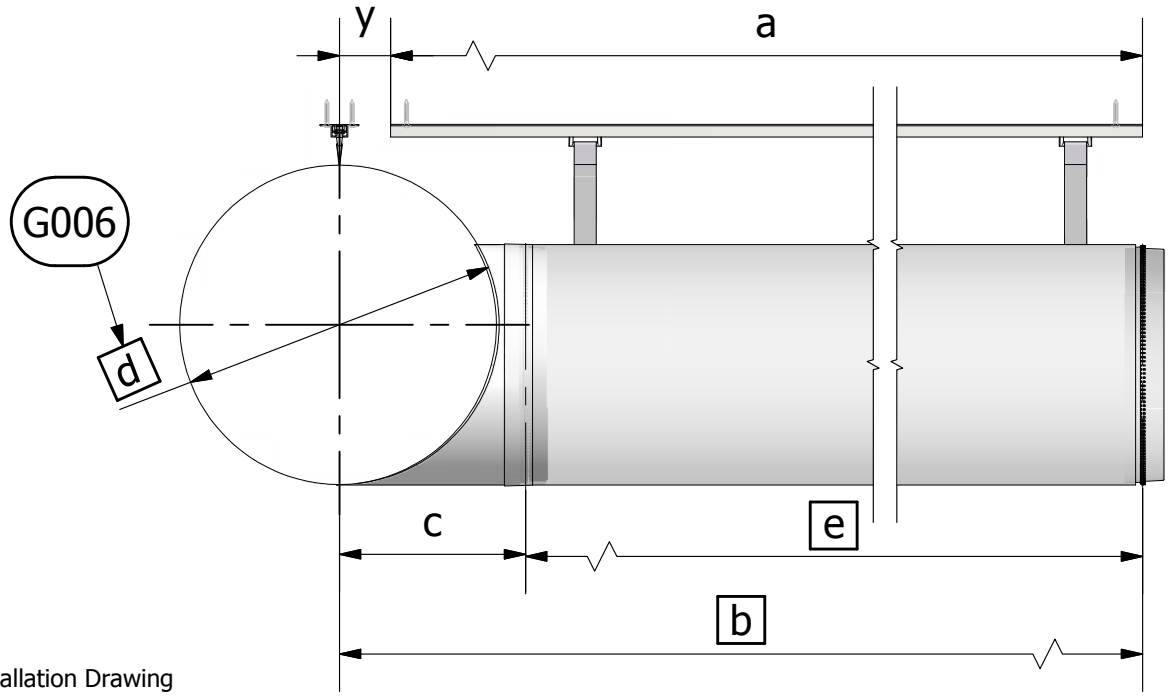

a = e + c - y

a = b - y

y = Max.65mm[2.56"]

c = ½ d + 35mm [1.38"]

03.18

Type 3

FabricAir® Installation Drawing

2003-0318-000 (2014-FEB)

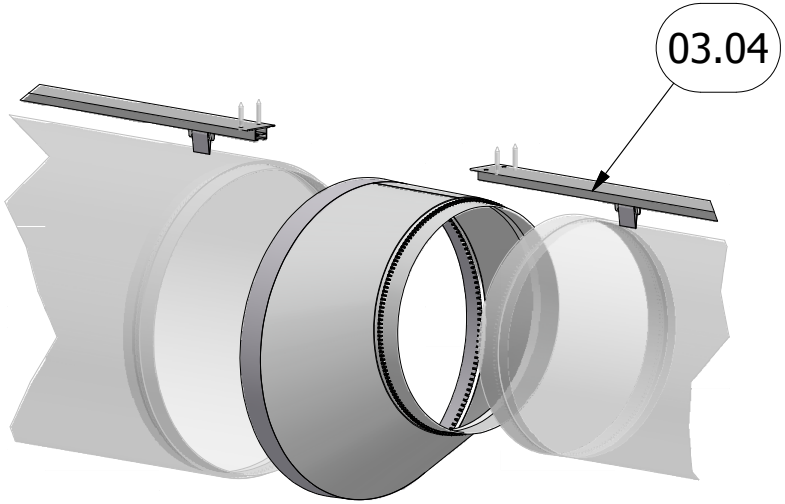

1

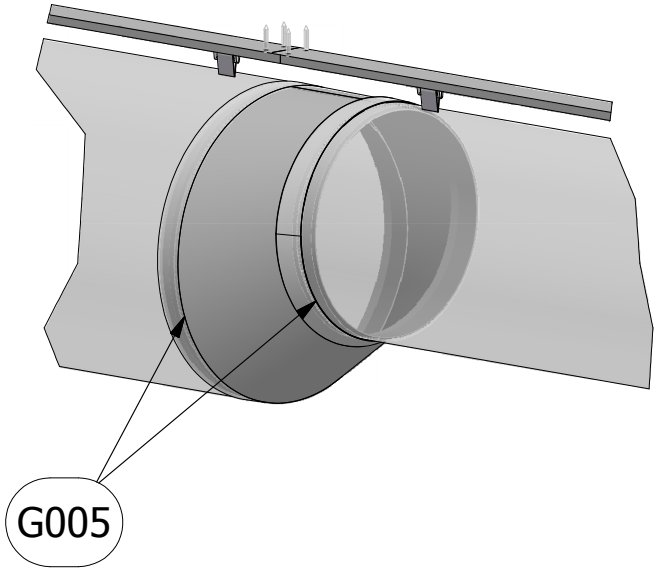

2

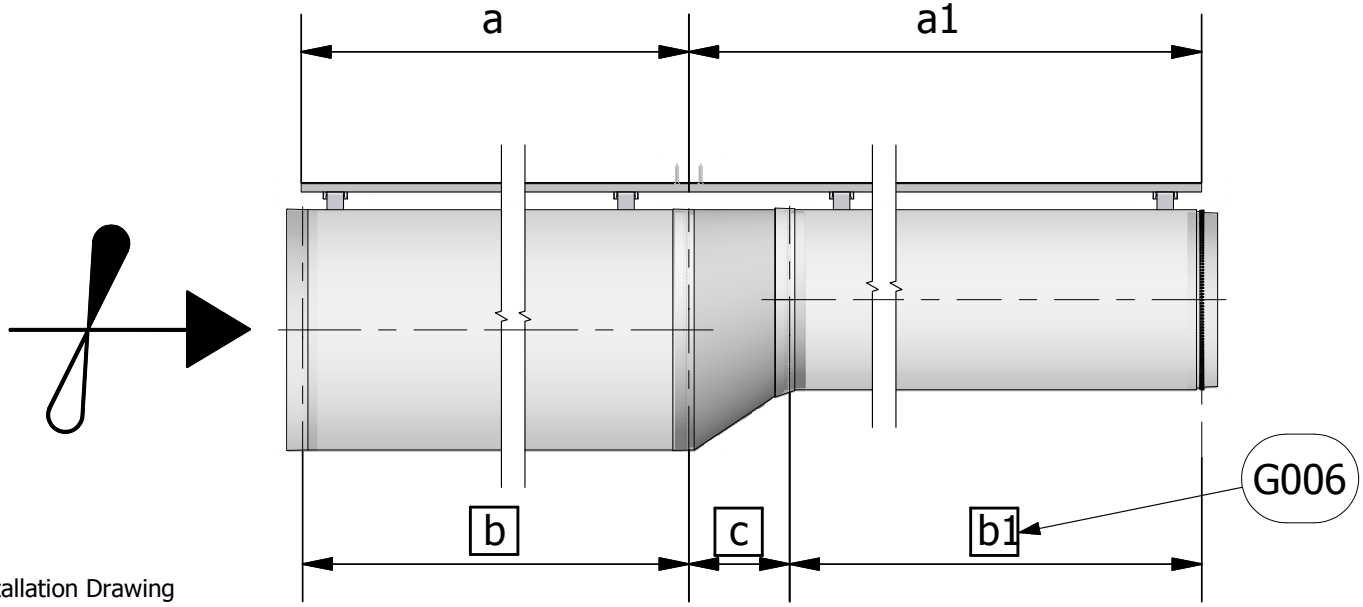

a = b

a1 = b1 + c

03.19

Type 3

FabricAir® Installation Drawing

2003-0319-000 (2014-FEB)

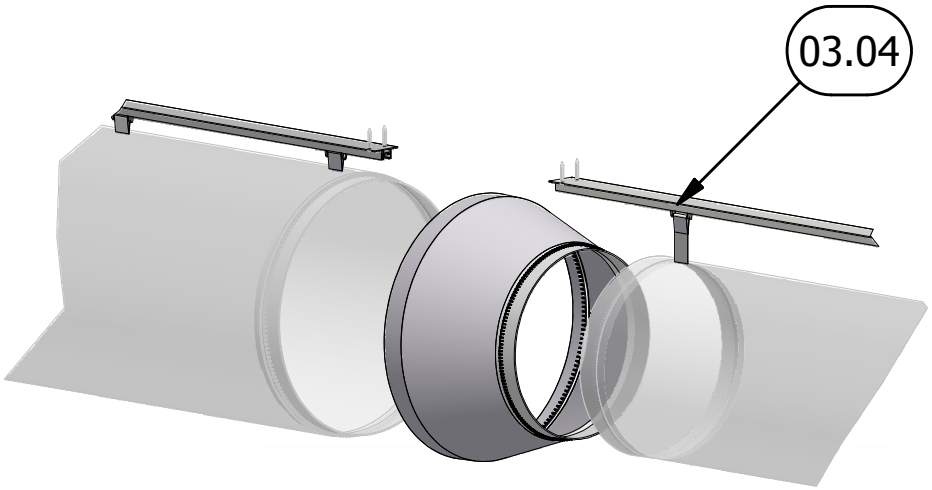

1

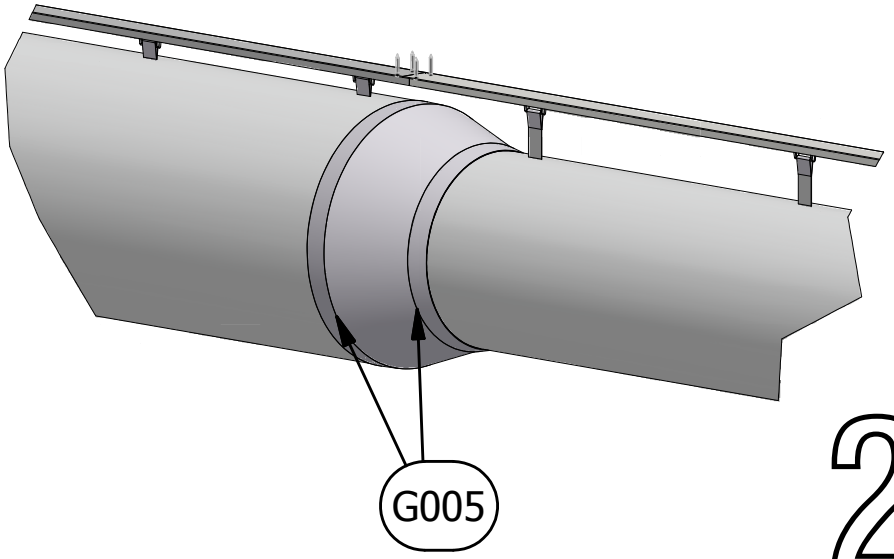

2

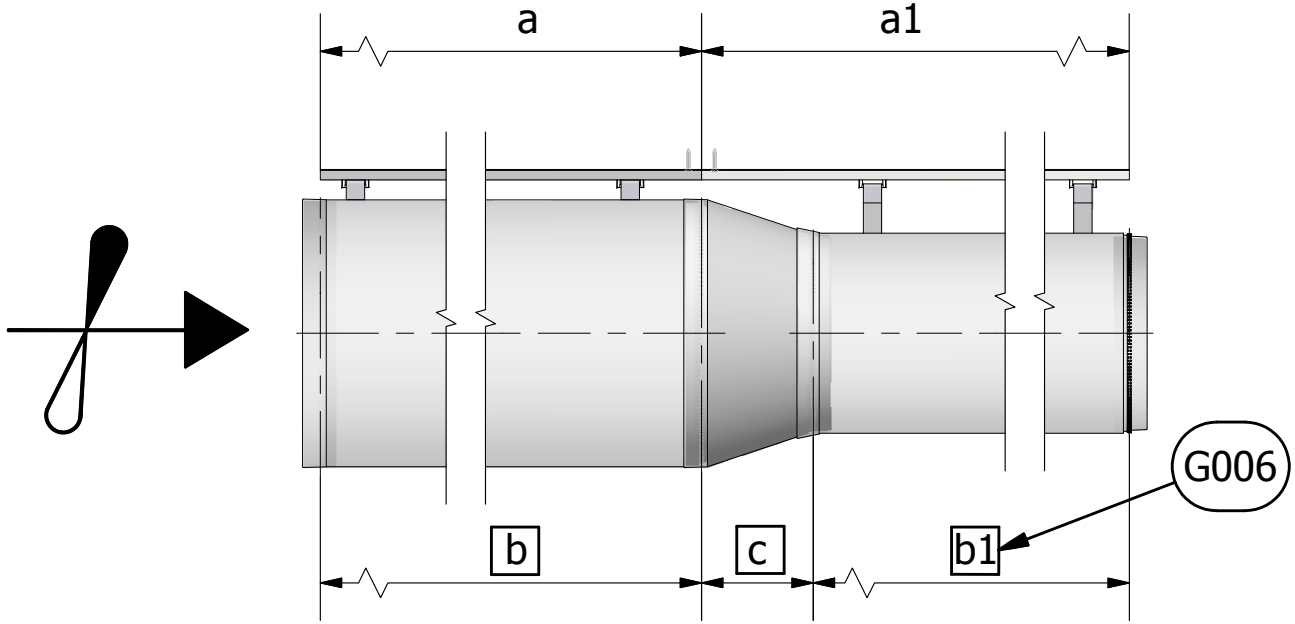

a = b

a1 = b1 + c

03.20

Type 3

FabricAir® Installation Drawing

2003-0320-000 (2014-FEB)

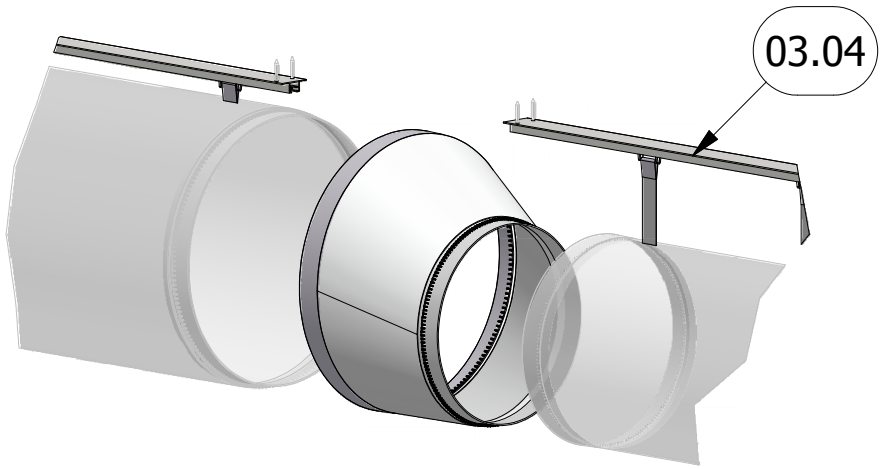

1

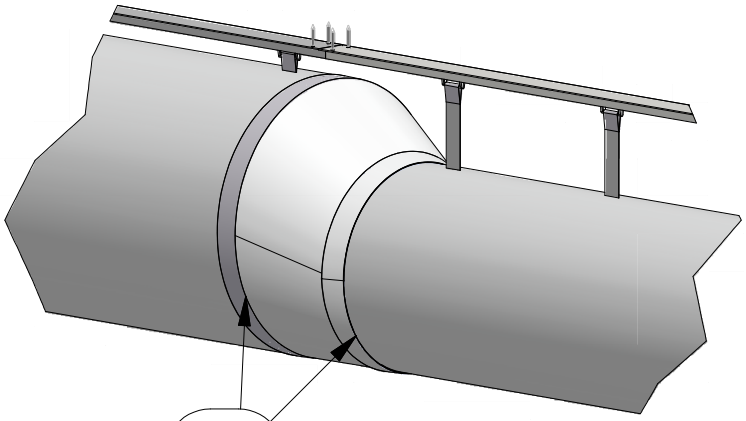

2

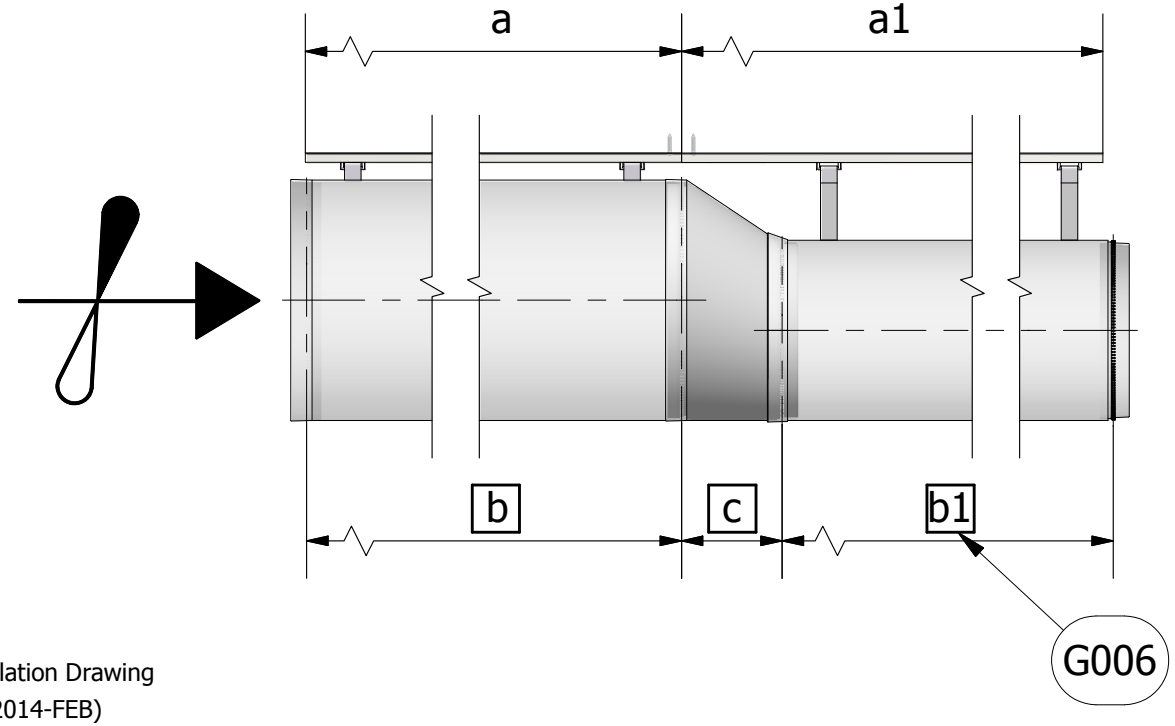

a = b

a1 = b1 + c

03.21

Type 3

FabricAir® Installation Drawing

2003-0321-000 (2014-FEB)

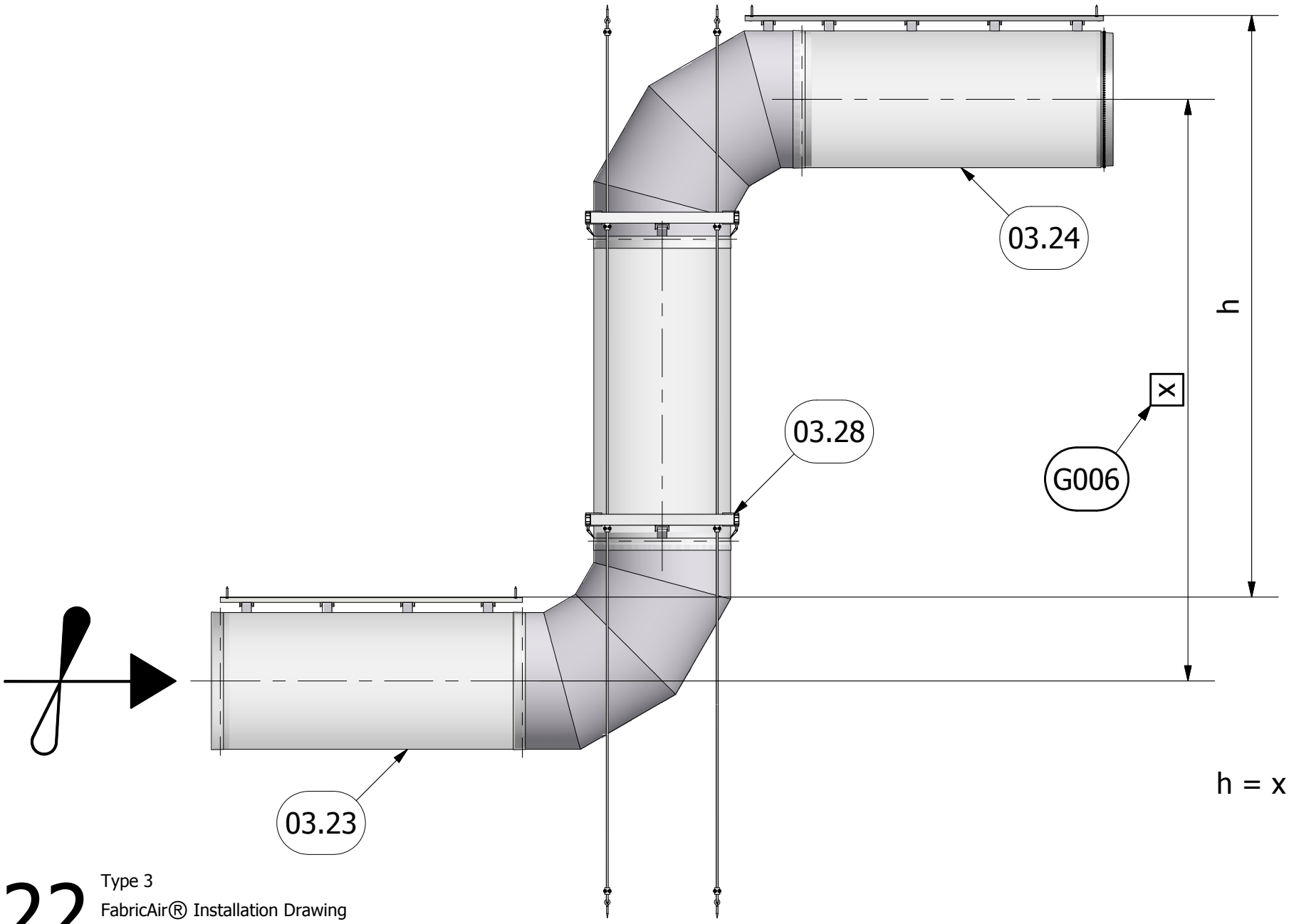

03.22

Type 3
FabricAir® Installation Drawing
2003-0322-000 (2014-FEB)

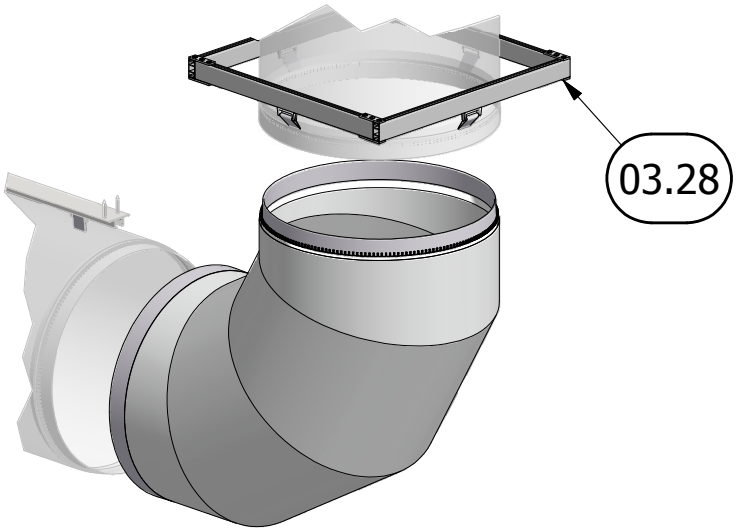

1

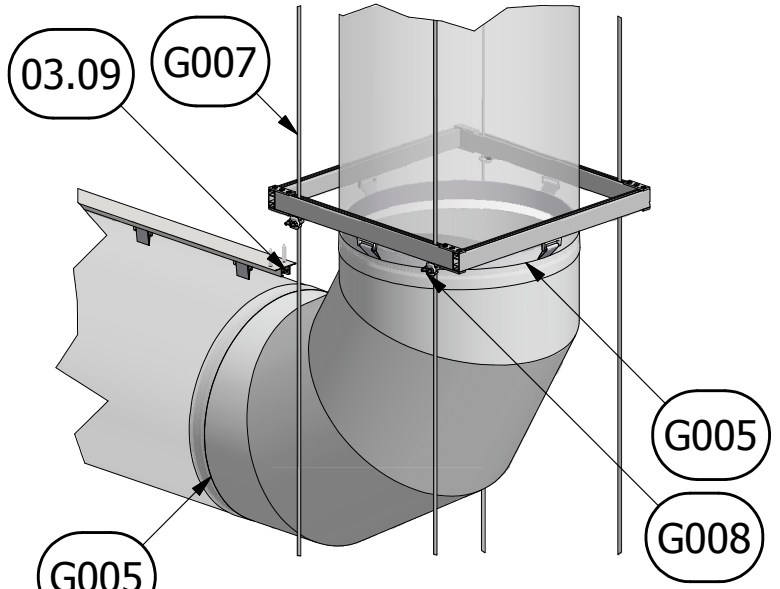

2

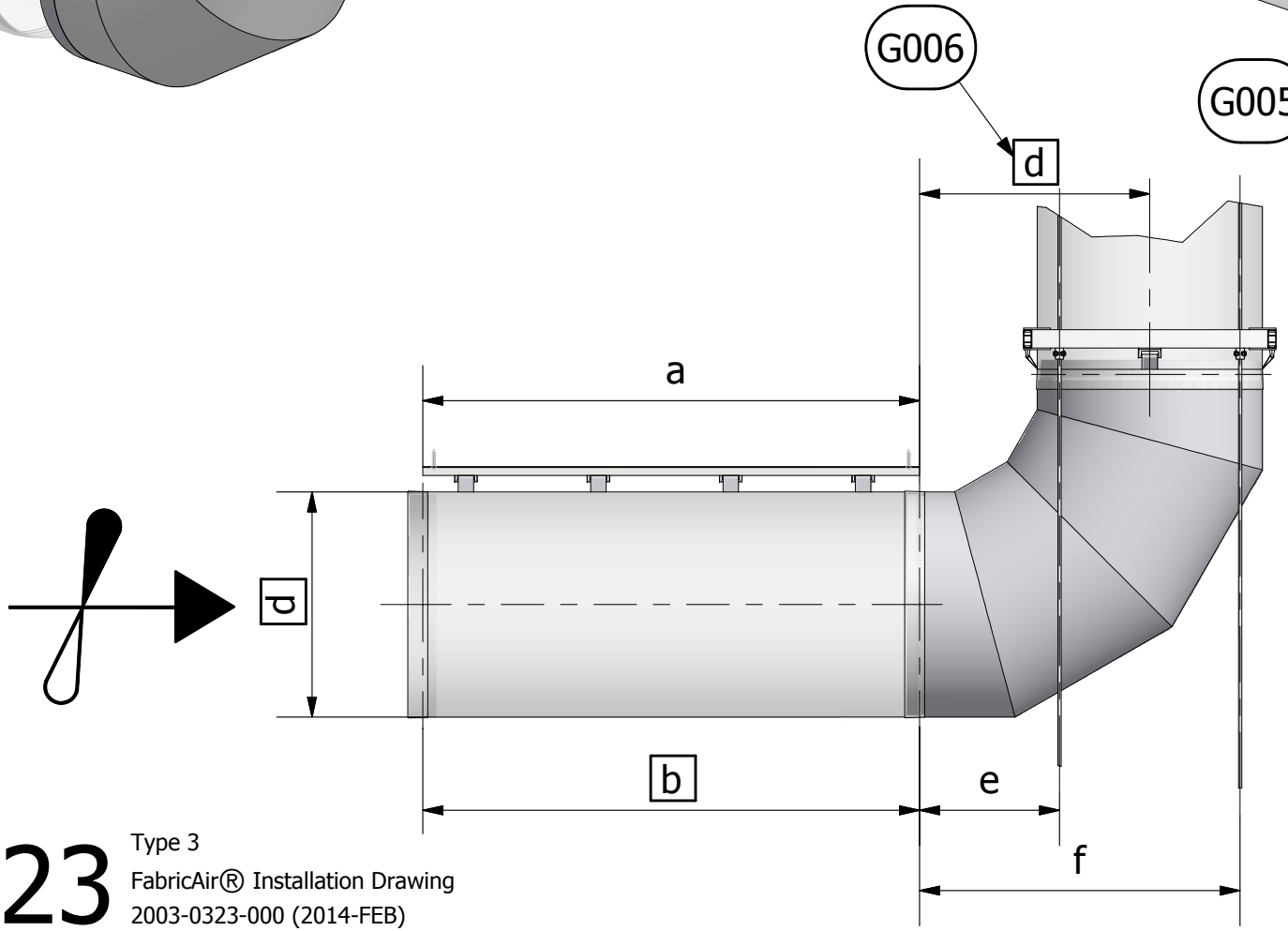

a = b

e = ½d + 40mm[1.57"]

f = d + ½d - 40 mm[1.57"]

03.23

Type 3

FabricAir® Installation Drawing

2003-0323-000 (2014-FEB)

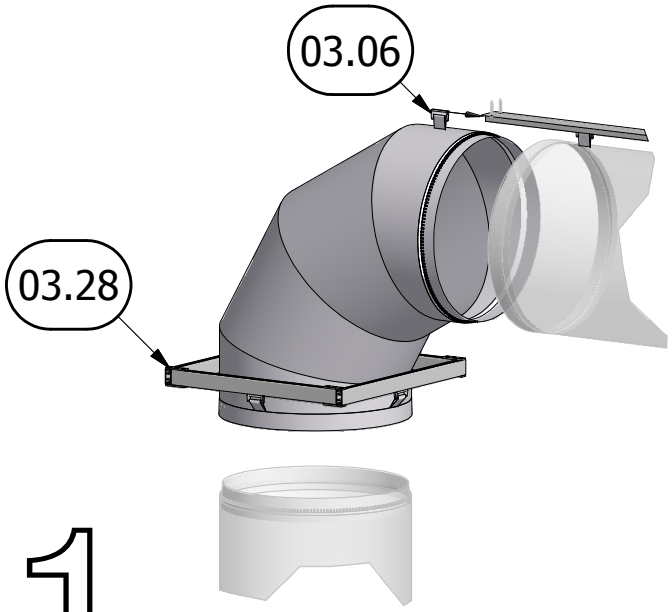

1

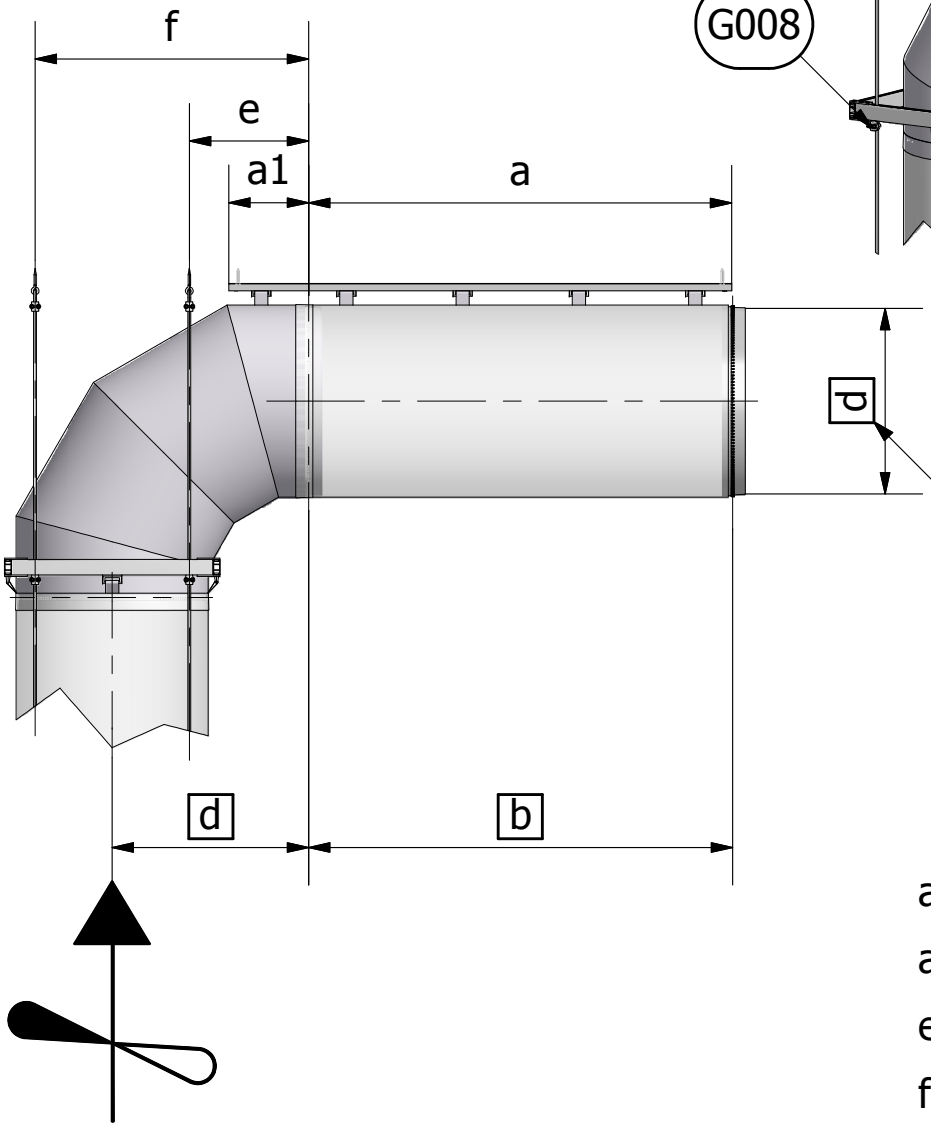

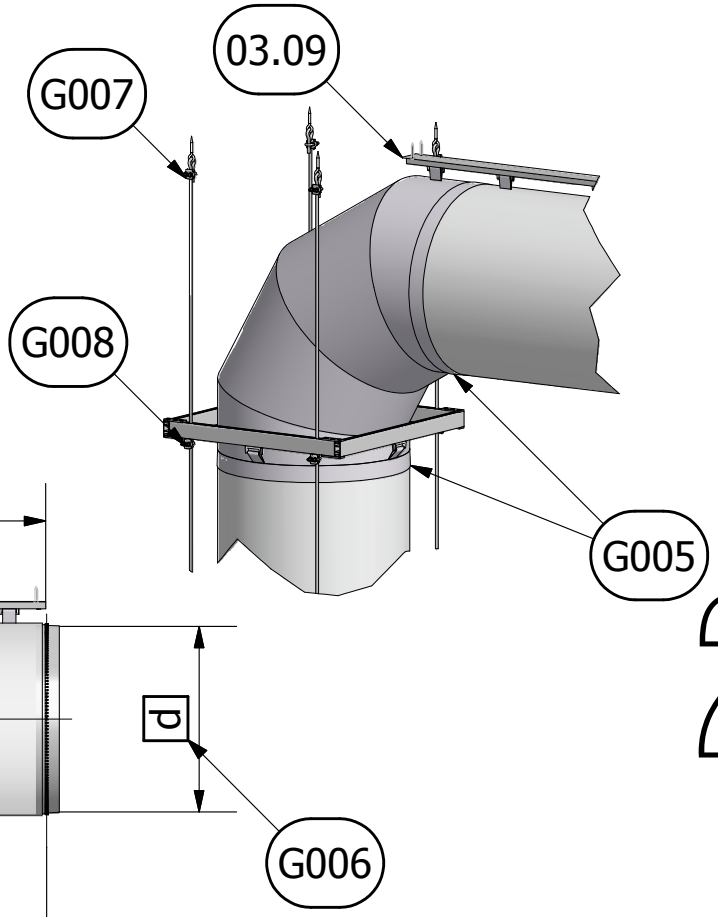

2

a1 = 0.4 x d

a = b

e = ½d + 40mm[1.57"]

f = d + ½d - 40mm[1.57"]

03.24

Type 3

FabricAir® Installation Drawing

2003-0324-000 (2014-FEB)

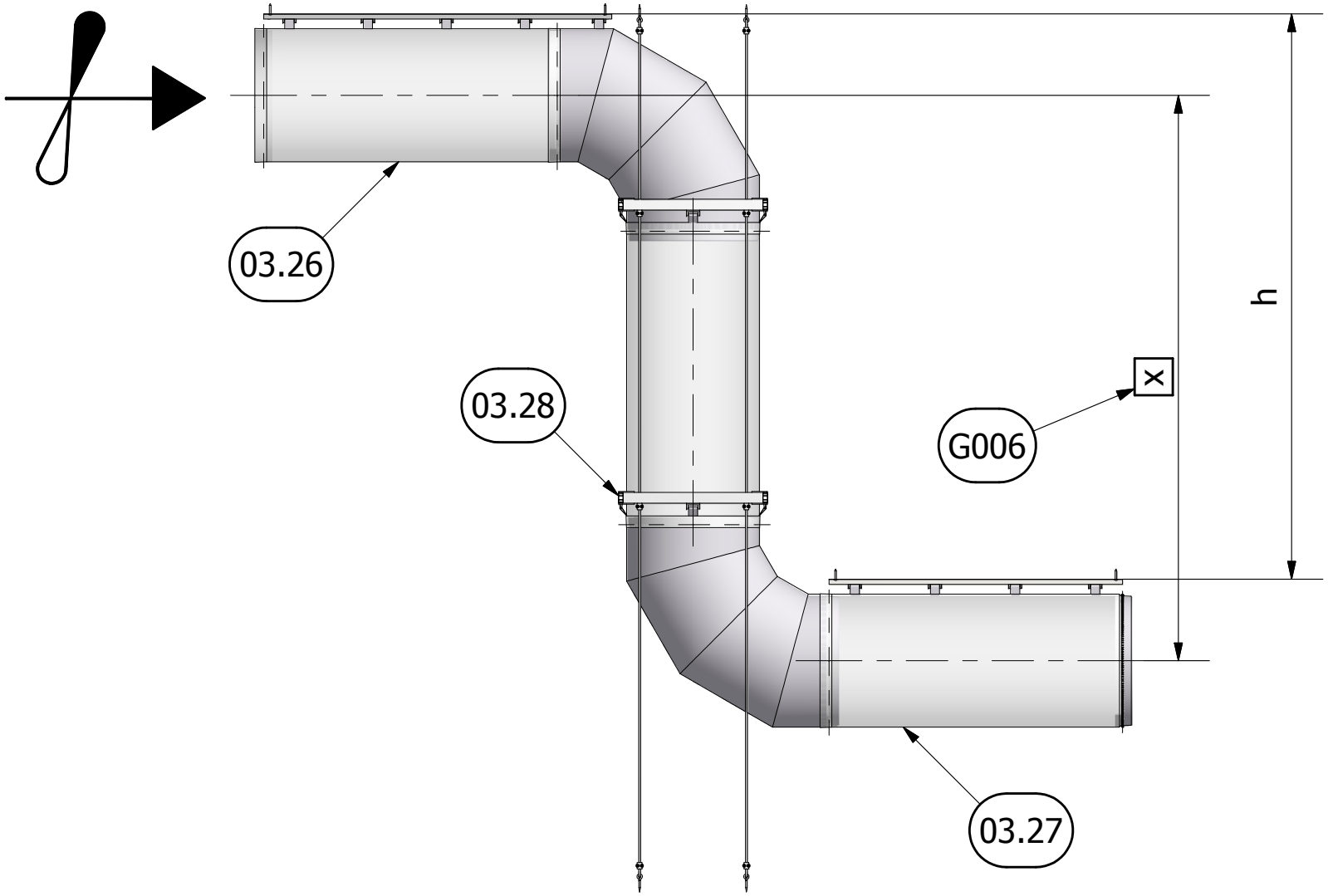

h = x

03.25

Type 3
FabricAir® Installation Drawing
2003-0325-000 (2014-FEB)

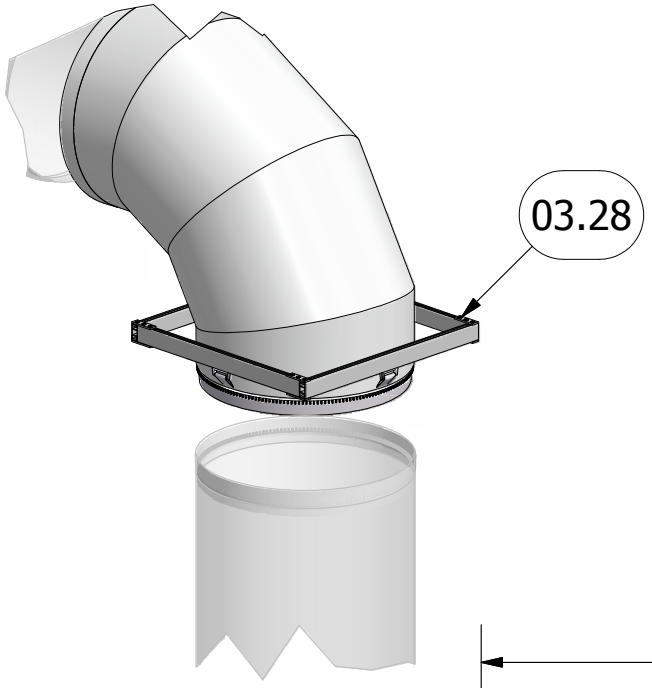

1

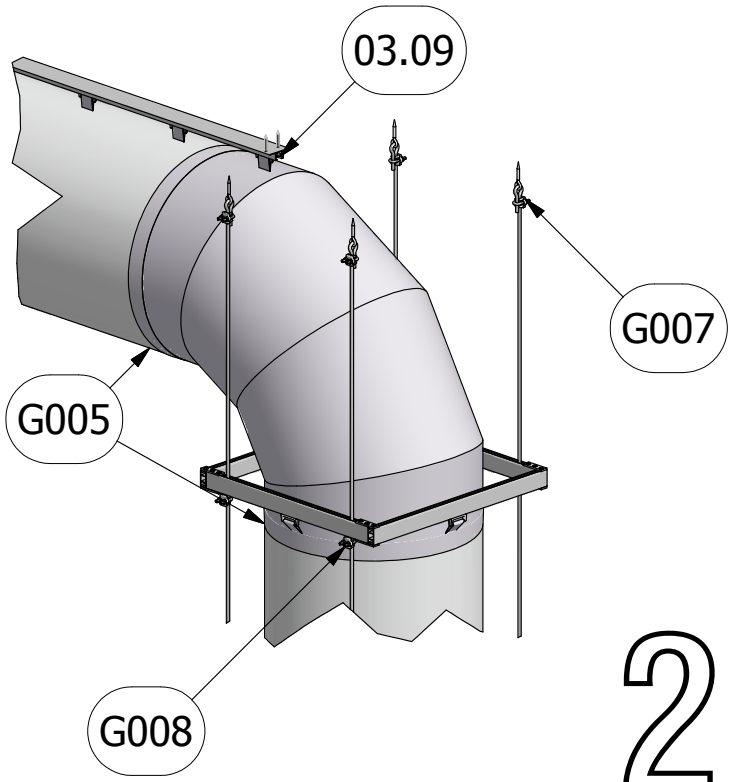

2

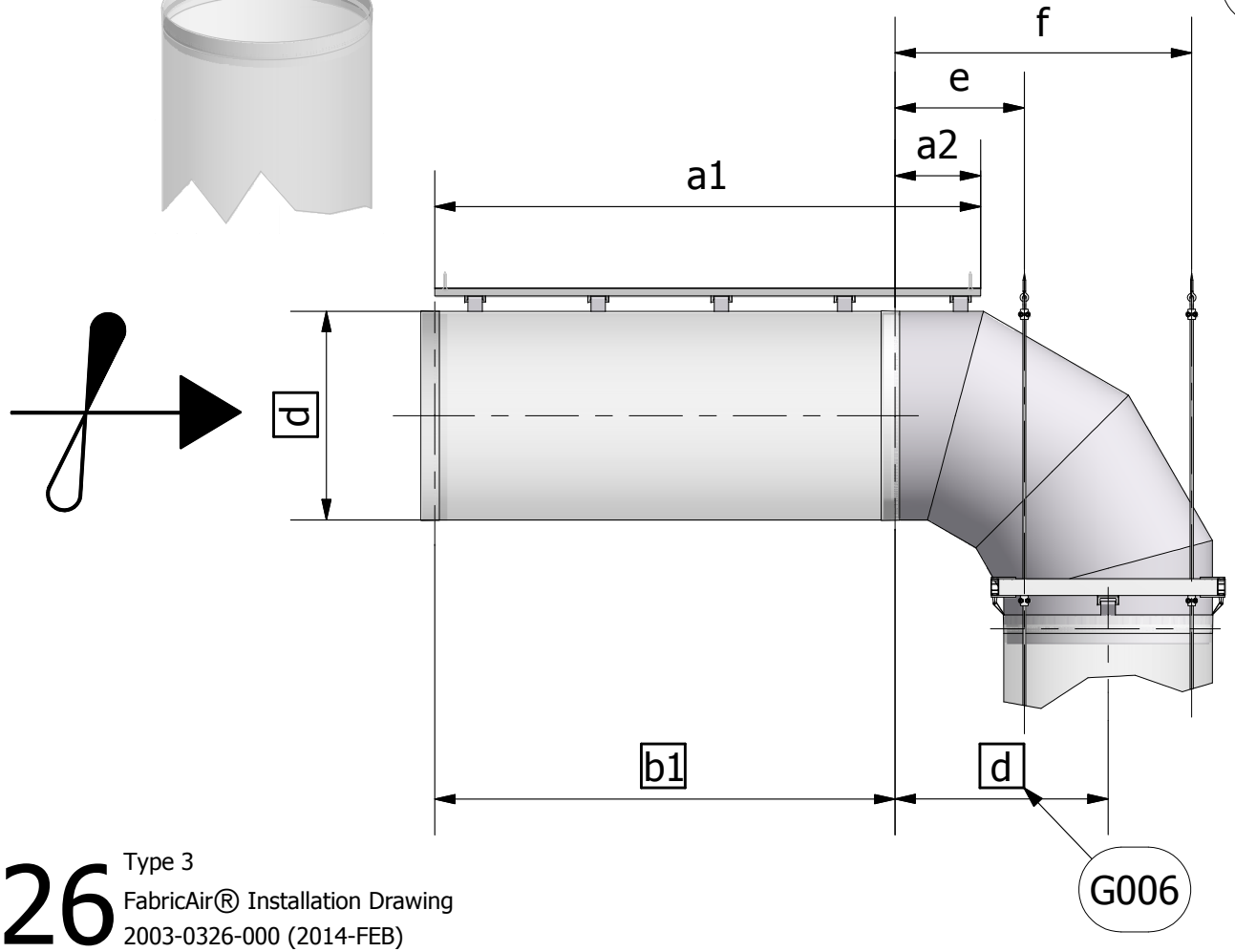

a2 = 0.4 x d

a1 = b1 + a2

e = ½d + 40mm[1.57"]

f = d + ½d - 40 mm[1.57"]

03.26

Type 3

FabricAir® Installation Drawing

2003-0326-000 (2014-FEB)

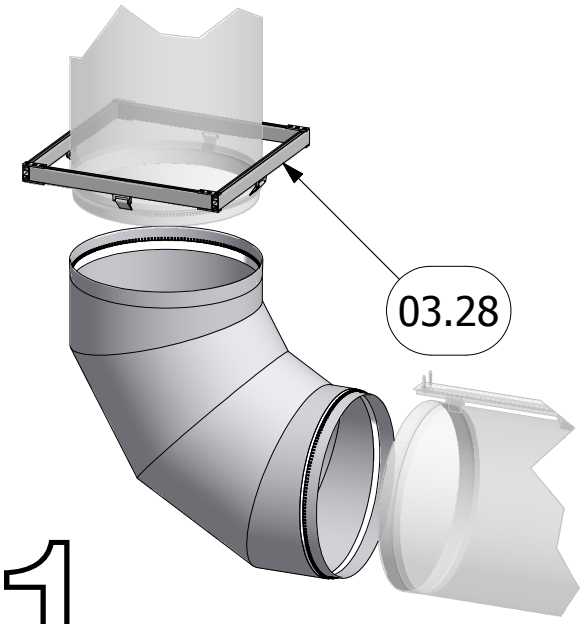

1

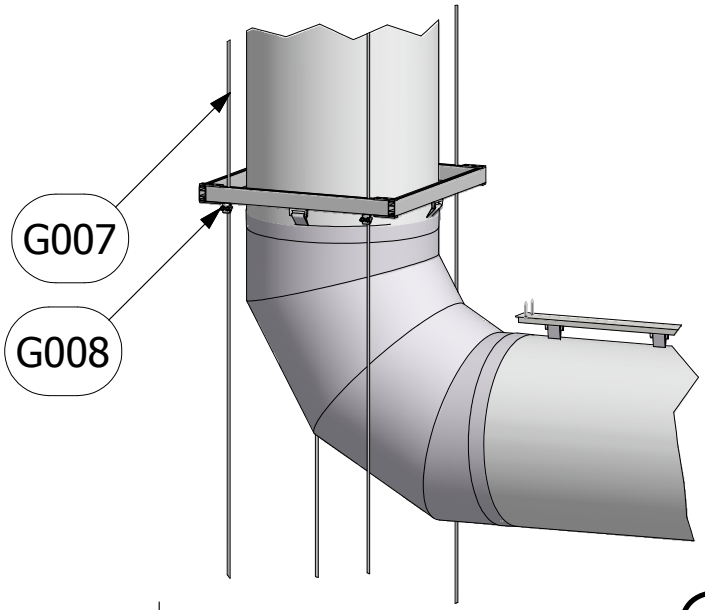

2

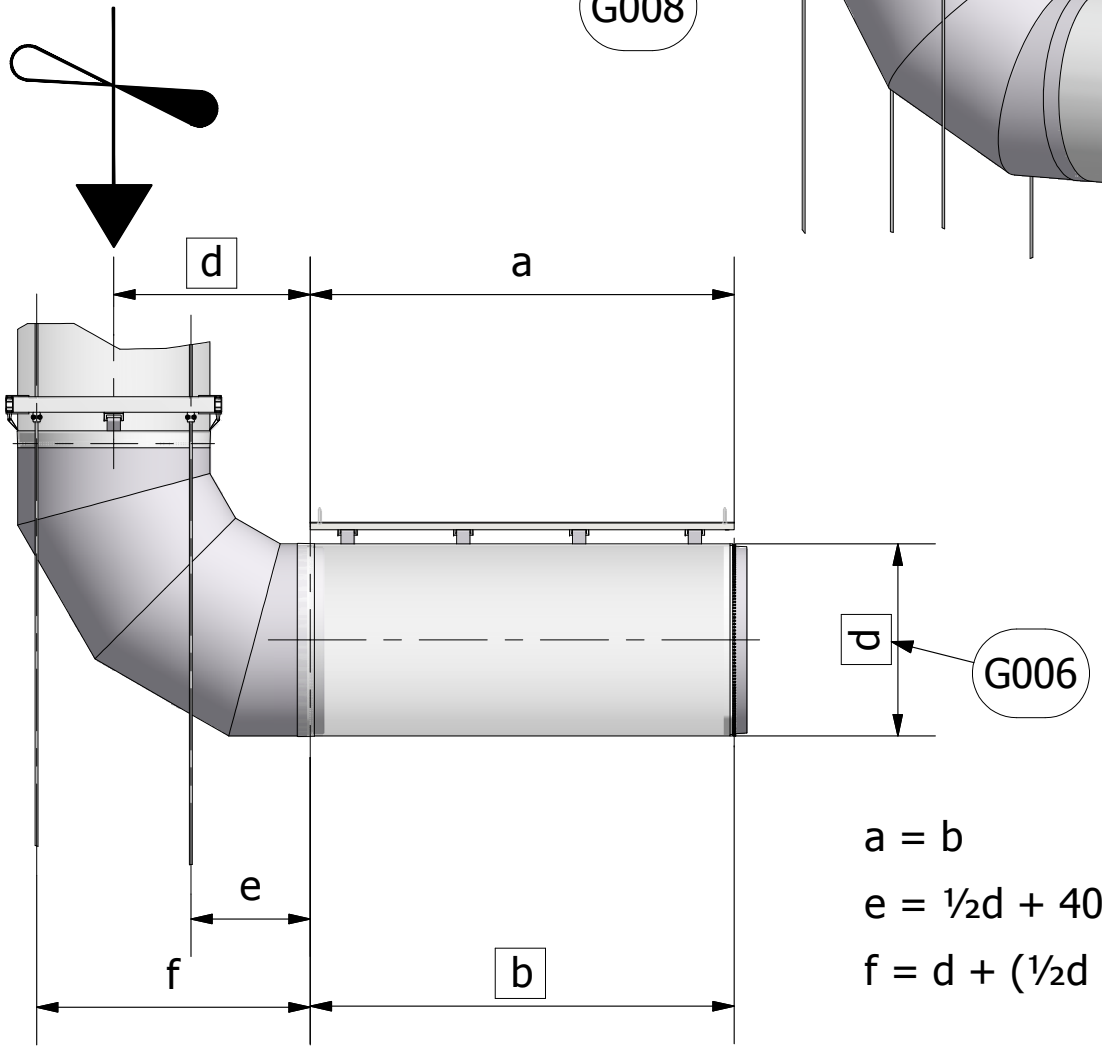

a = b

e = ½d + 40mm[1.57"]

f = d + (½d - 40mm[1.57"])

03.27

Type 3

FabricAir® Installation Drawing

2003-0327-000 (2014-FEB)

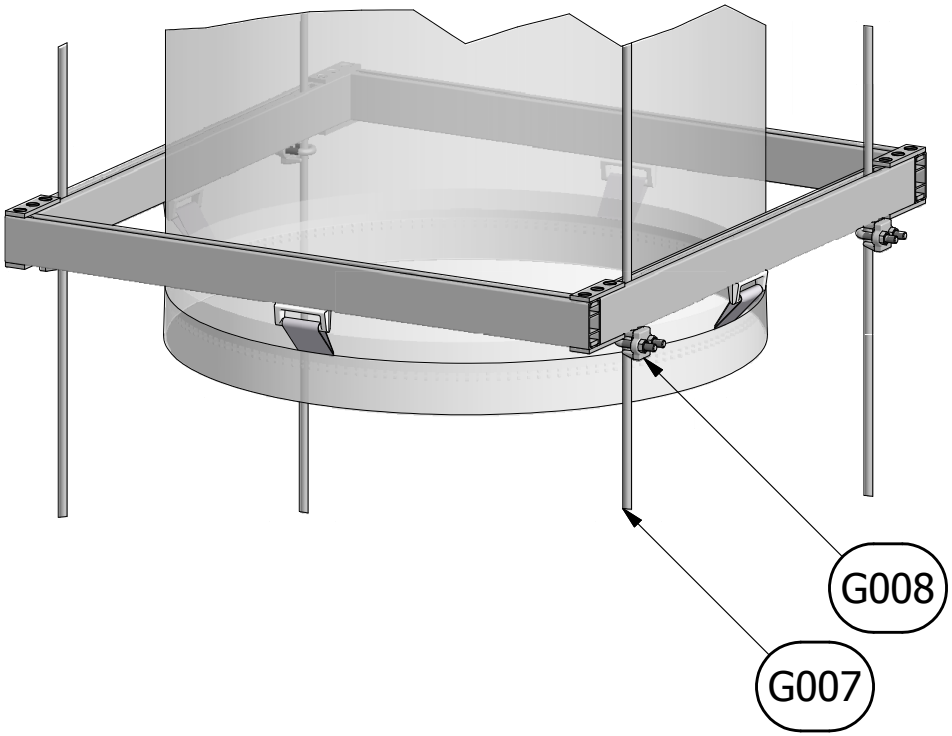

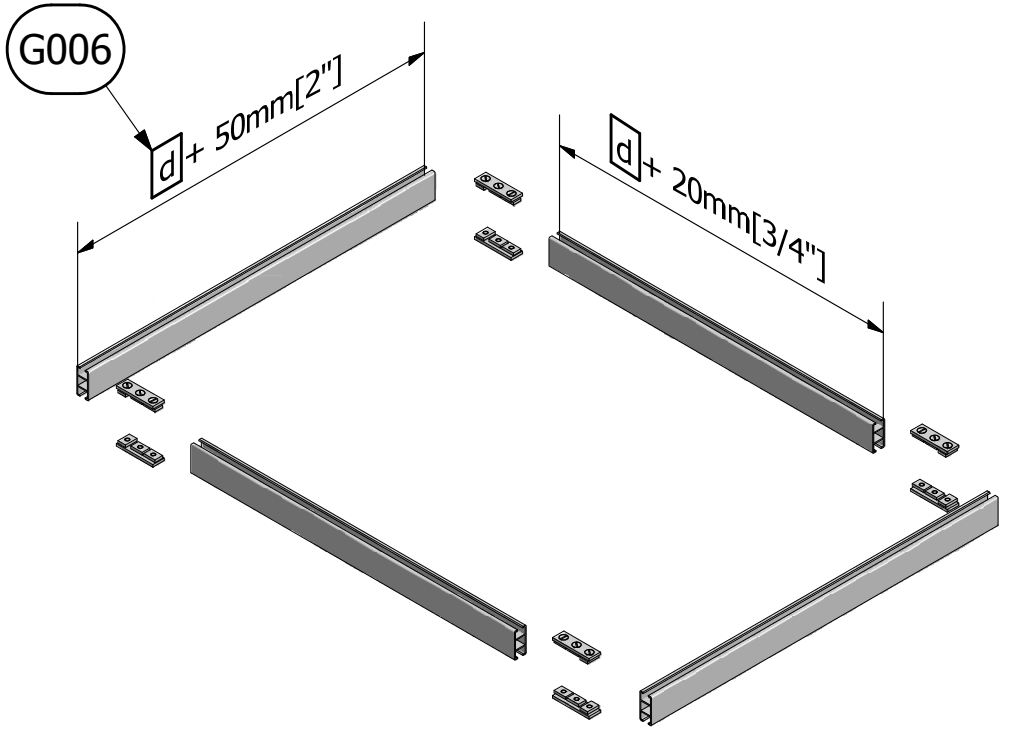

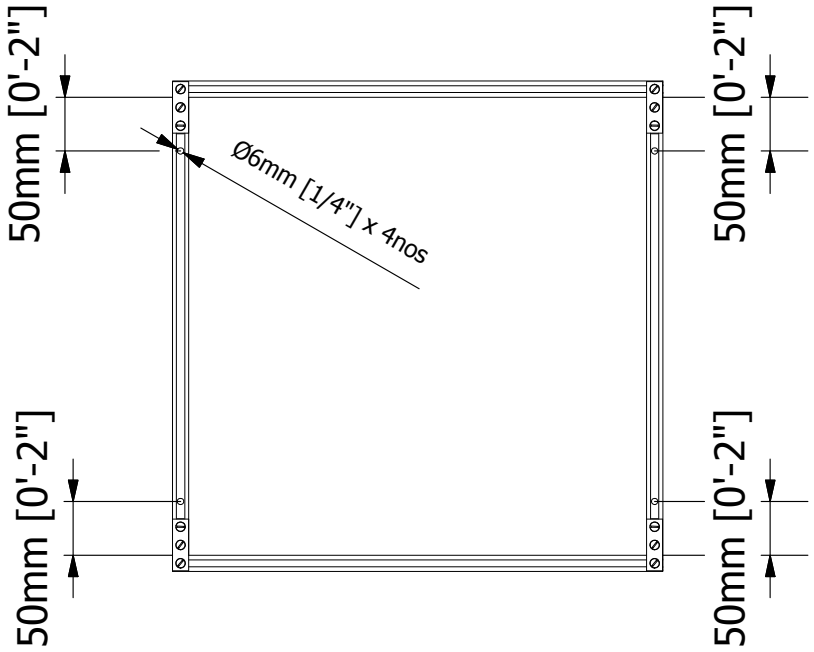

03.28

Type 3
FabricAir® Installation Drawing
2003-0328-000 (2014-FEB)

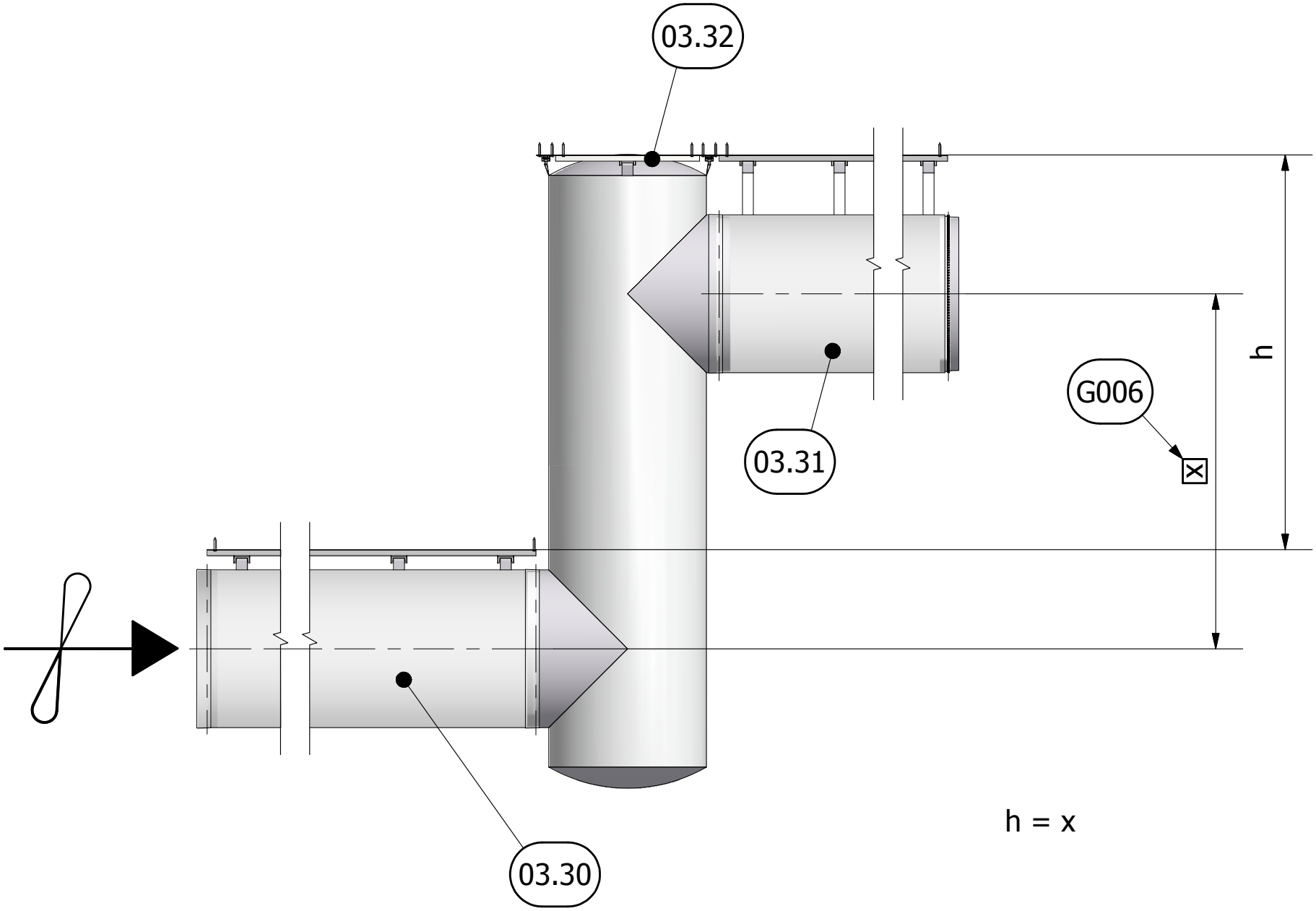

03.29

Type 3
FabricAir® Installation Drawing
2003-0329-000 (2014-FEB)

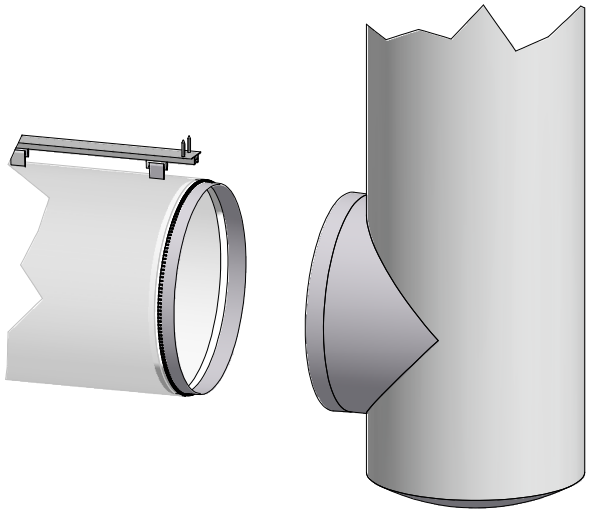

1

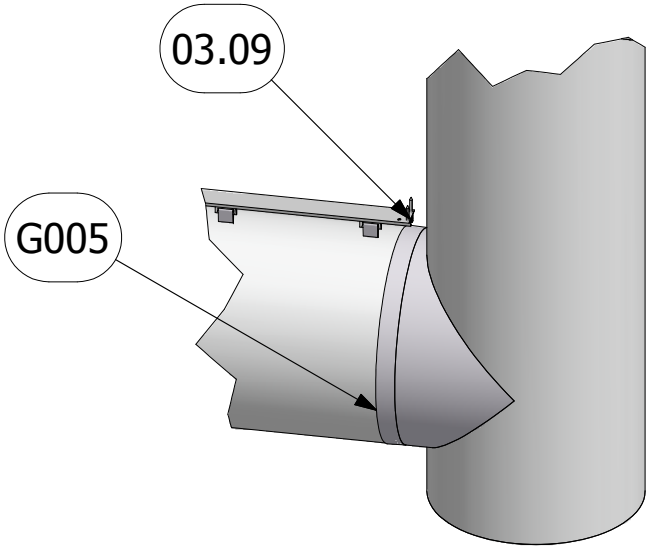

2

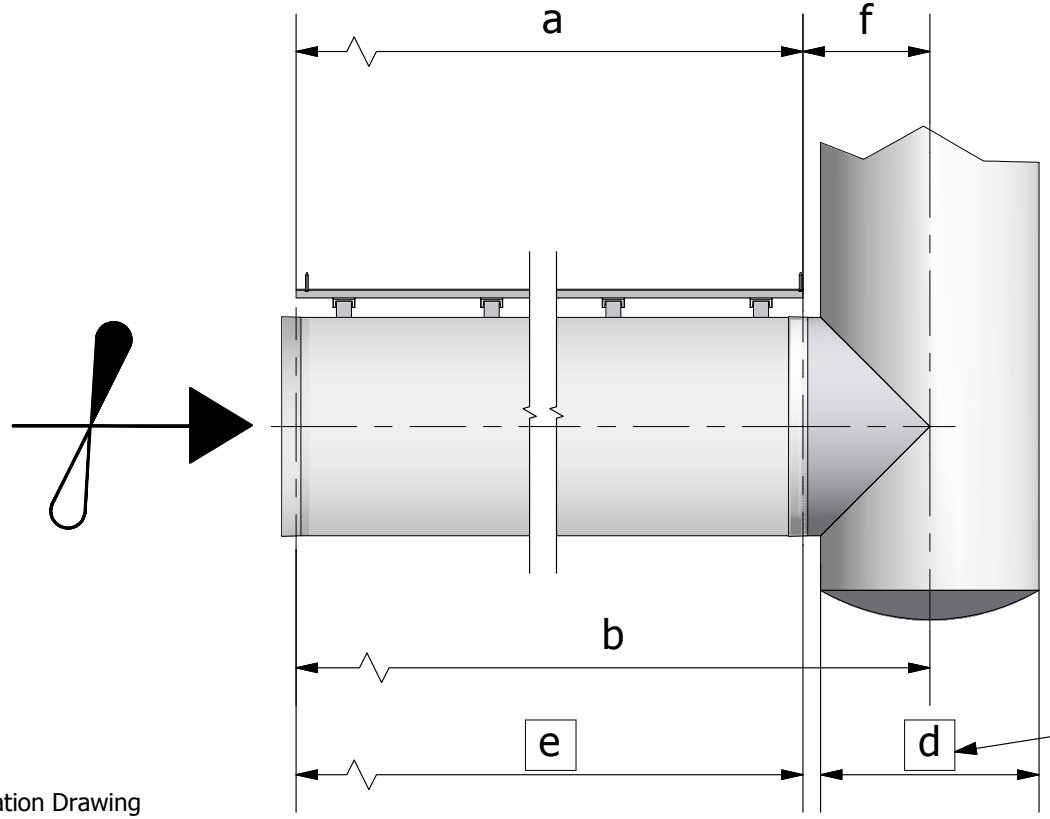

a = e

a = b - f

f = ½d + 35mm[1.38"]

03.30

Type 3

FabricAir® Installation Drawing

2003-0330-000 (2014-FEB)

1

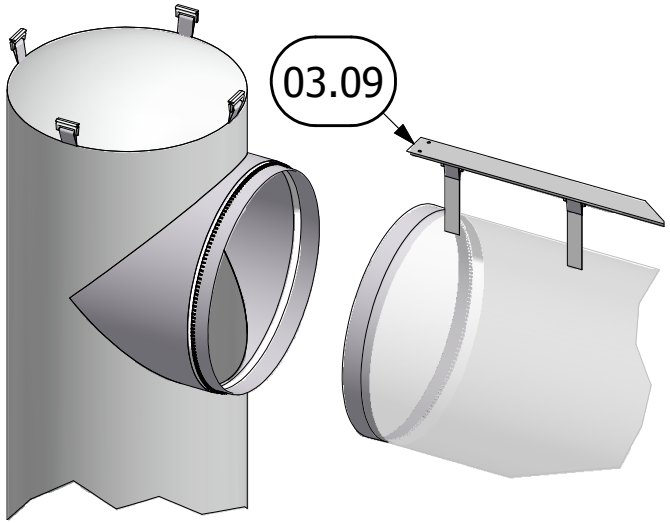

2

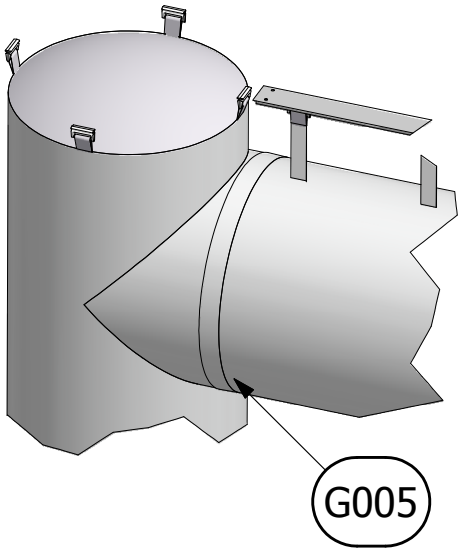

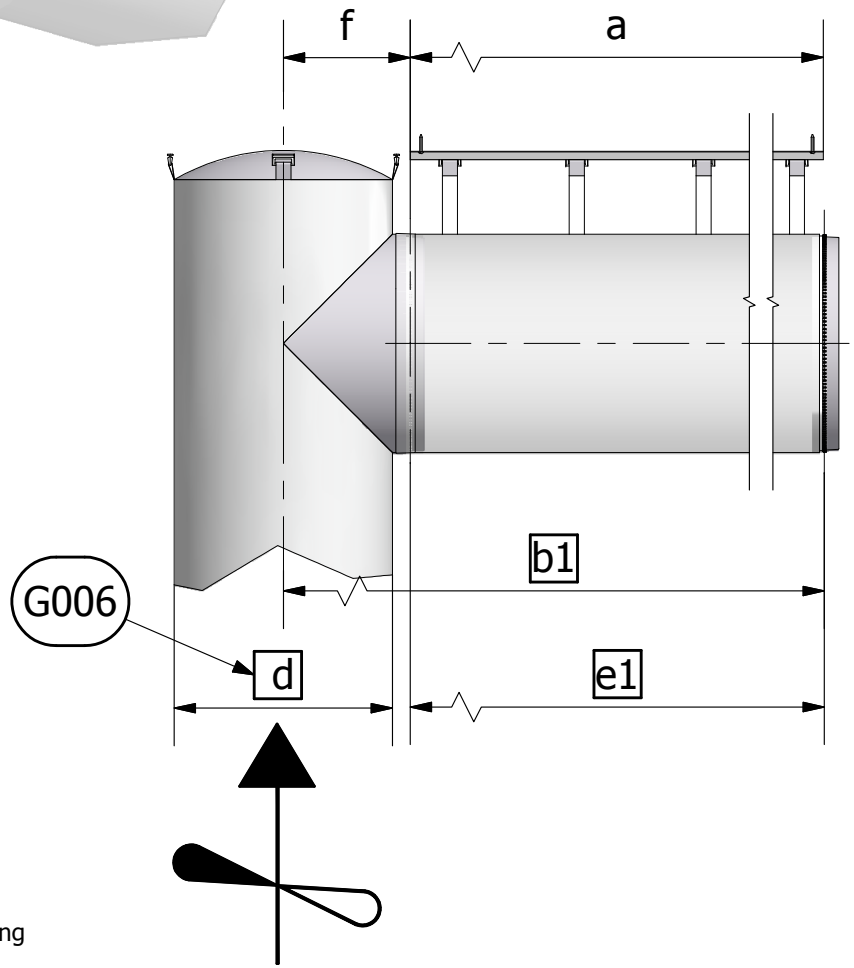

a = b1 - f

a = e1

f = ½d + 35mm[1.38"]

03.31

Type 3

FabricAir® Installation Drawing

2003-0331-000 (2014-FEB)

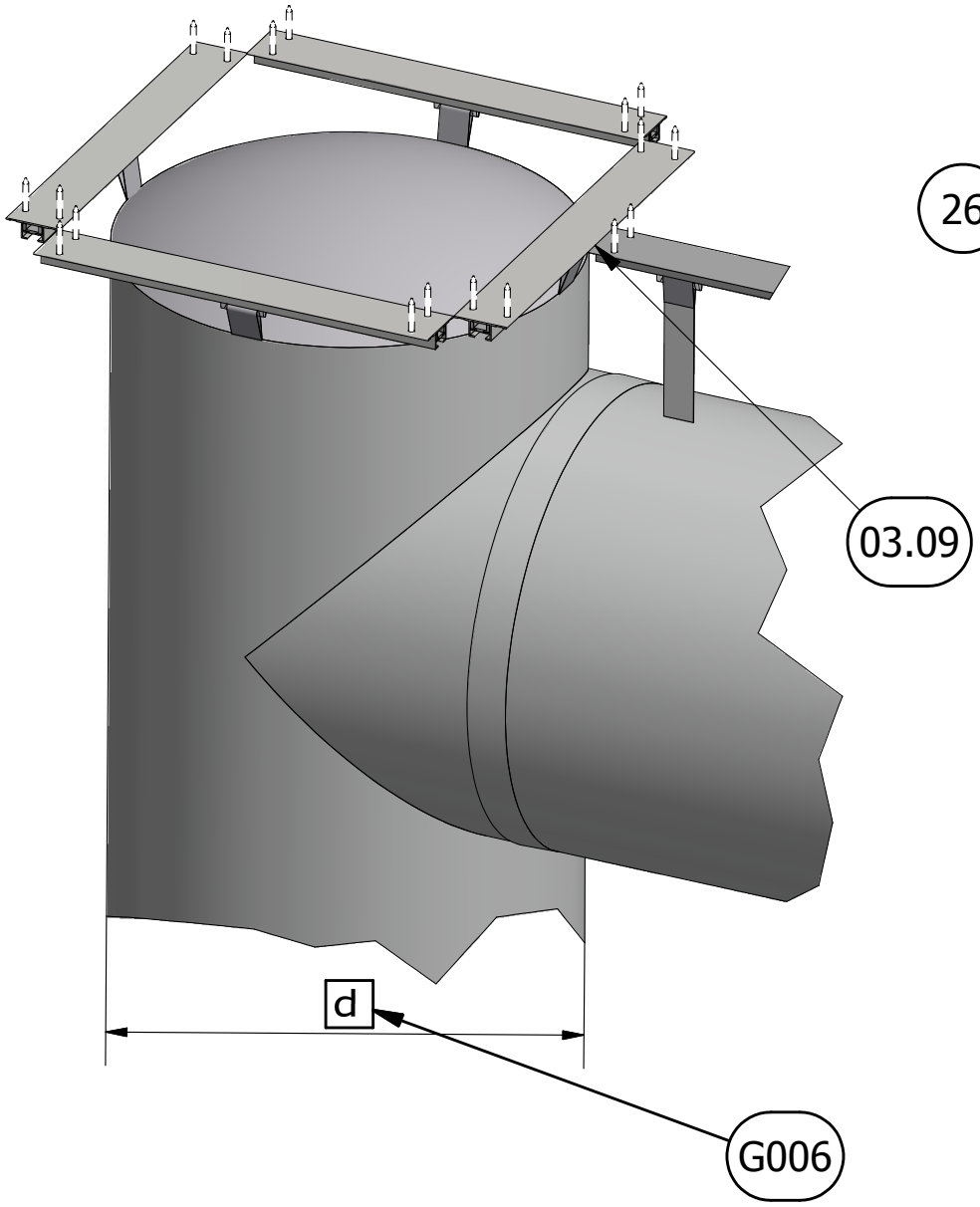

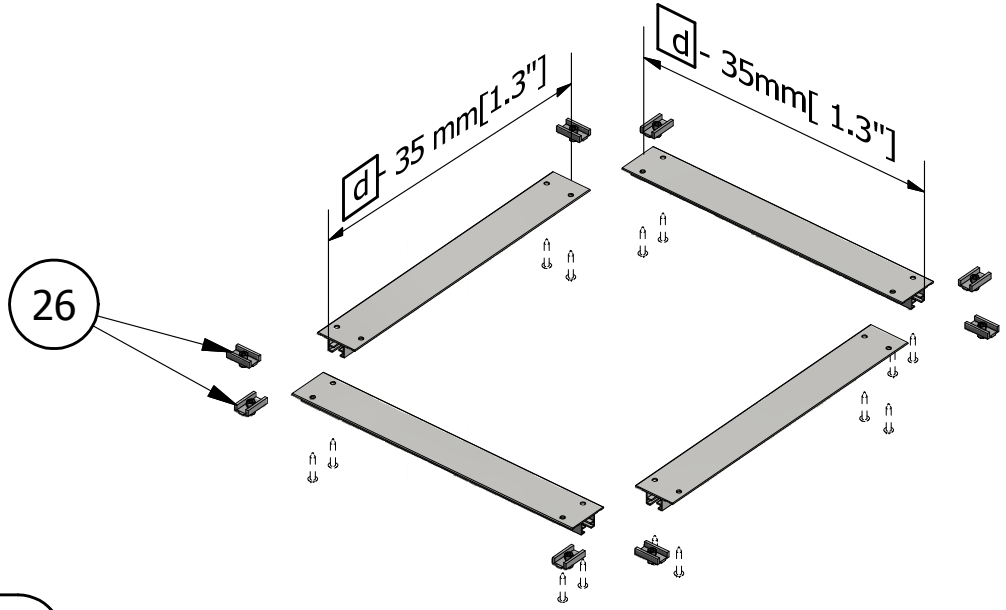

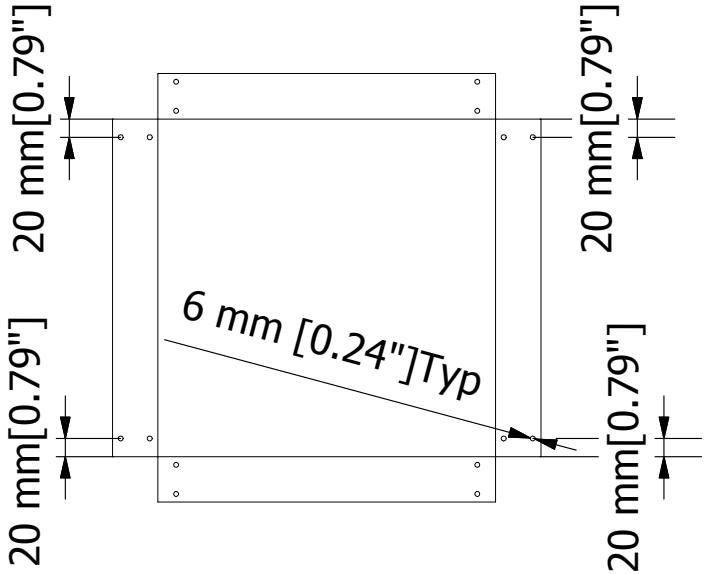

03.32

Type 3
FabricAir® Installation Drawing
2003-0332-000 (2014-FEB)

90°

d-DuctDiam.[inch]	d-DuctDiam.[mm]	L1	g
	100	36	54
	160	52	86
	200	63	107
8	205	64	110
	250	76	134
10	255	77	137
	300	89	161
12	305	91	163
	315	93	169
14	360	105	193
	400	116	214
16	410	119	220
	450	130	241
18	460	132	247
	500	143	268
20	510	146	273
22	560	159	300
	600	170	322
24	610	172	327
	630	178	388
26	660	186	354
	710	199	380
28	715	201	383
30	765	214	410
	800	223	429
32	815	227	437
34	865	241	464
	900	250	482
36	915	254	490
38	965	268	517
	1000	277	536
40	1020	282	547
42	1070	296	573
	1100	304	589
44	1120	309	600
46	1170	323	627
	1200	331	643
48	1220	336	654
	1250	344	670
50	1270	349	681
	1300	357	697
52	1320	363	707
	1400	384	750
56	1425	391	764
58	1480	406	793
	1500	411	804
60	1525	418	817
62	1580	432	847
	1600	438	857
64	1630	446	874
66	1680	459	900
	1700	465	911
68	1730	473	927
70	1780	486	954
	1800	491	965
72	1830	499	981
	1900	518	1018
76	1930	526	1034
	2000	545	1072
80	2035	554	1091

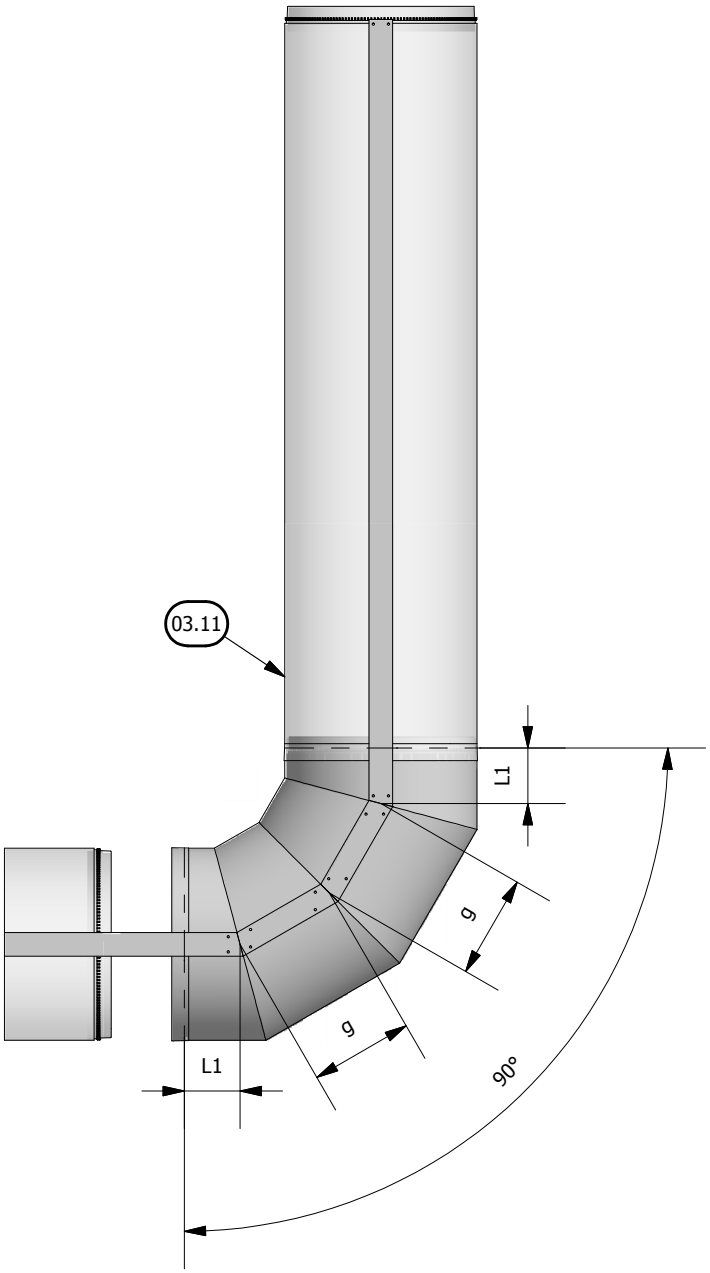

45°

d-DuctDiam.[inch]	d-DuctDiam.[mm]	L1
	100	50
	160	75
	200	92
8	205	94
	250	113
10	255	115
	300	133
12	305	135
	315	139
14	360	158
	400	175
16	410	179
	450	195
18	460	200
	500	216
20	510	220
22	560	241
	600	258
24	610	262
	630	270
26	660	282
	710	303
28	715	305
30	765	326
	800	340
32	815	347
34	865	367
	900	382
36	915	388
38	965	409
	1000	423
40	1020	431
42	1070	452
	1100	465
44	1120	473
46	1170	494
	1200	506
48	1220	514
	1250	527
50	1270	535
	1300	547
52	1320	556
	1400	589
56	1425	599
58	1480	622
	1500	630
60	1525	641
62	1580	663
	1600	672
64	1630	684
66	1680	705
	1700	713
68	1730	726
70	1780	746
	1800	755
72	1830	767
	1900	796
76	1930	808
	2000	837
80	2035	852

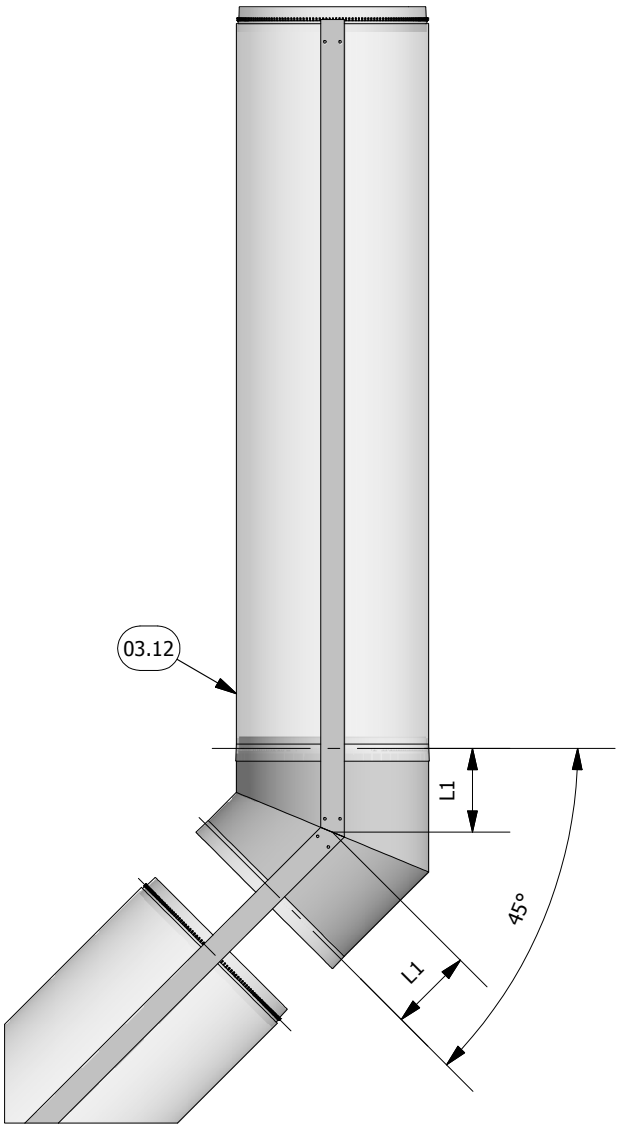

30°

d-DuctDiam.[inch]	d-DuctDiam.[mm]	L1
	100	36
	160	52
	200	63
8	205	64
	250	76
10	255	77
	300	89
12	305	91
	315	93
14	360	105
	400	116
16	410	119
	450	130
18	460	132
	500	143
20	510	146
22	560	159
	600	170
24	610	172
	630	178
26	660	186
	710	199
28	715	201
30	765	214
	800	223
32	815	227
34	865	241
	900	250
36	915	254
38	965	268
	1000	277
40	1020	282
42	1070	296
	1100	304
44	1120	309
46	1170	323
	1200	331
48	1220	336
	1250	344
50	1270	349
	1300	357
52	1320	363
	1400	384
56	1425	391
58	1480	406
	1500	411
60	1525	418
62	1580	432
	1600	438
64	1630	446
66	1680	459
	1700	465
68	1730	473
70	1780	486
	1800	491
72	1830	499
	1900	518
76	1930	526
	2000	545
80	2035	554

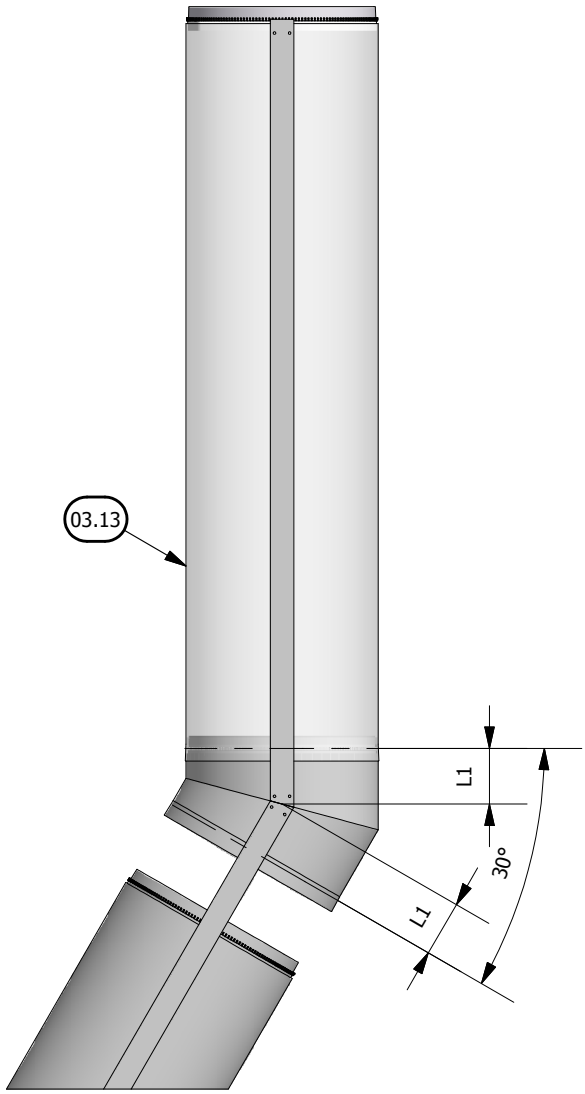

60°

d-DuctDiam.[inch]	d-DuctDiam.[mm]	L1
	100	67
	160	101
	200	124
8	205	127
	250	153
10	255	156
	300	182
12	305	185
	315	191
14	360	217
	400	240
16	410	246
	450	269
18	460	275
	500	298
20	510	303
22	560	332
	600	355
24	610	361
	630	373
26	660	390
	710	419
28	715	422
30	765	451
	800	471
32	815	480
34	865	508
	900	529
36	915	537
38	965	566
	1000	586
40	1020	598
42	1070	627
	1100	644
44	1120	656
46	1170	684
	1200	702
48	1220	713
	1250	731
50	1270	742
	1300	760
52	1320	771
	1400	817
56	1425	832
58	1480	863
	1500	875
60	1525	889
62	1580	921
	1600	932
64	1630	950
66	1680	978
	1700	990
68	1730	1007
70	1780	1036
	1800	1048
72	1830	1065
	1900	1105
76	1930	1123
	2000	1163
80	2035	1183

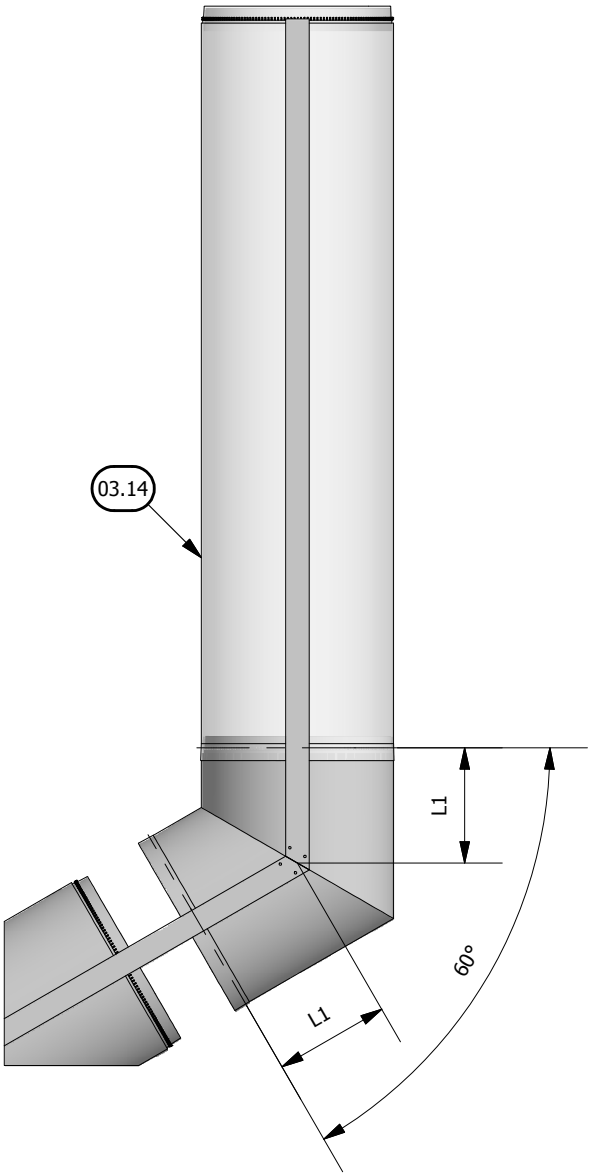

15°

d-DuctDiam.[inch]	d-DuctDiam.[mm]	L1
	100	22
	160	30
	200	35
8	205	36
	250	42
10	255	43
	300	48
12	305	49
	315	50
14	360	56
	400	62
16	410	63
	450	68
18	460	70
	500	75
20	510	76
22	560	83
	600	88
24	610	89
	630	92
26	660	96
	710	102
28	715	103
30	765	110
	800	114
32	815	116
34	865	123
	900	127
36	915	129
38	965	136
	1000	141
40	1020	143
42	1070	150
	1100	154
44	1120	156
46	1170	163
	1200	167
48	1220	170
	1250	174
50	1270	176
	1300	180
52	1320	183
	1400	193
56	1425	197
58	1480	204
	1500	206
60	1525	210
62	1580	217
	1600	220
64	1630	224
66	1680	230
	1700	233
68	1730	237
70	1780	243
	1800	246
72	1830	250
	1900	259
76	1930	263
	2000	272
80	2035	277

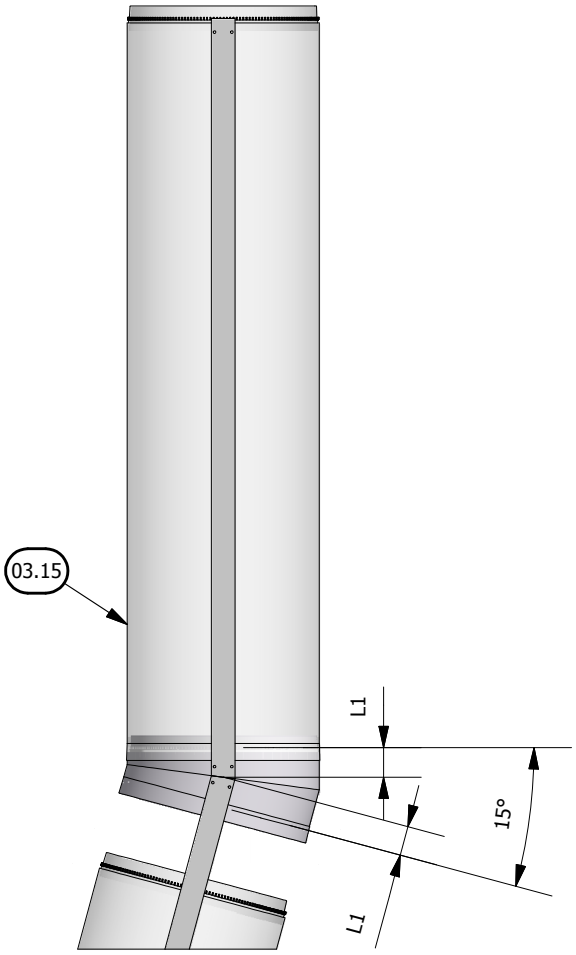

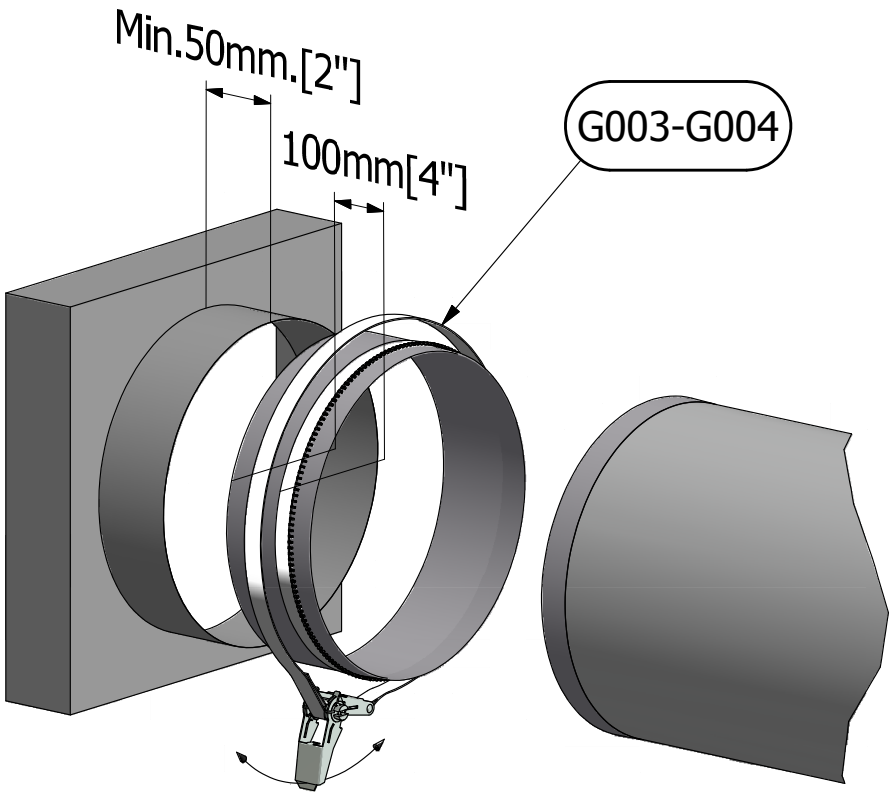

1

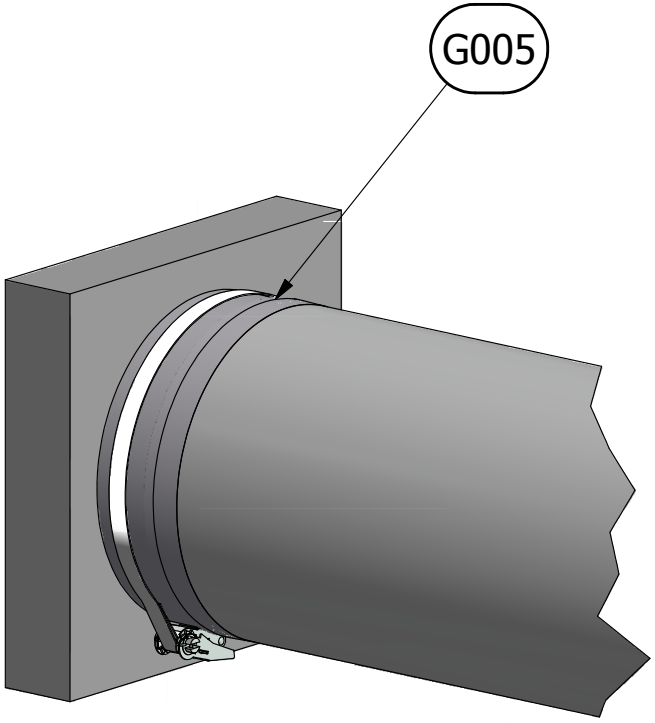

2

G001

FabricAir® Installation Drawing

2003-G001-000 (2014-FEB)

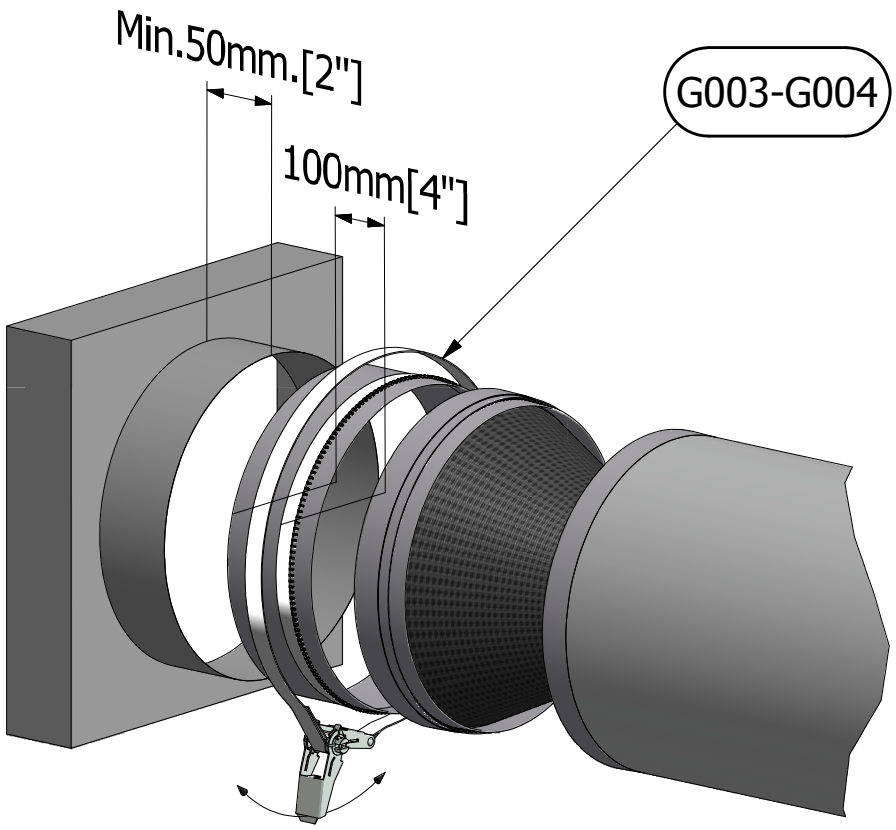

1

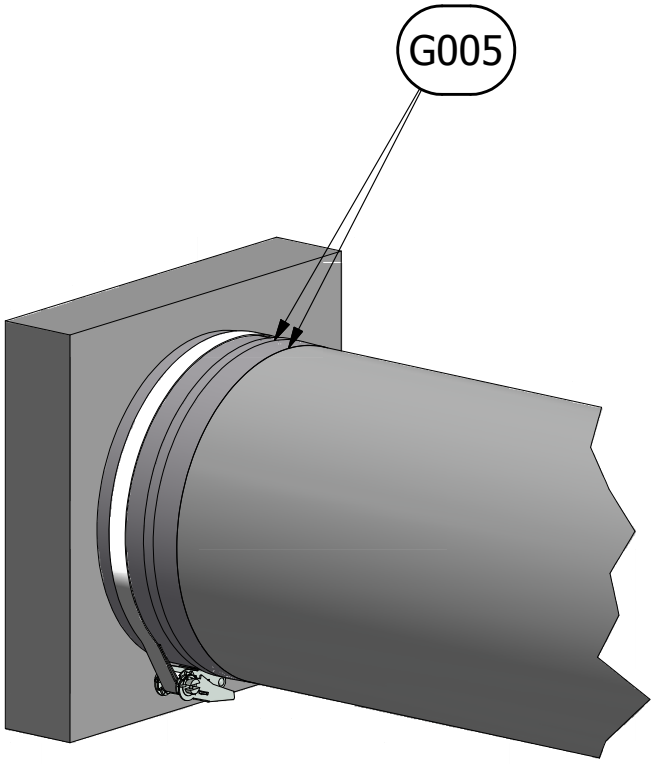

2

G002

FabricAir® Installation Drawing
2003-G002-000 (2014-FEB)

No. 17 (d < 508mm [20in])

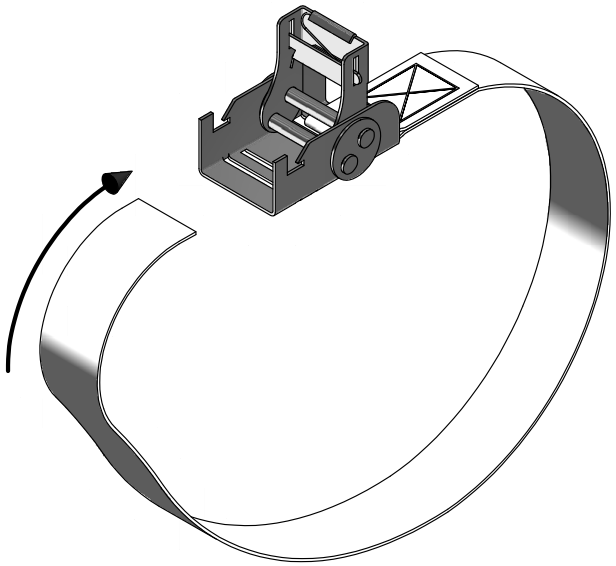

1

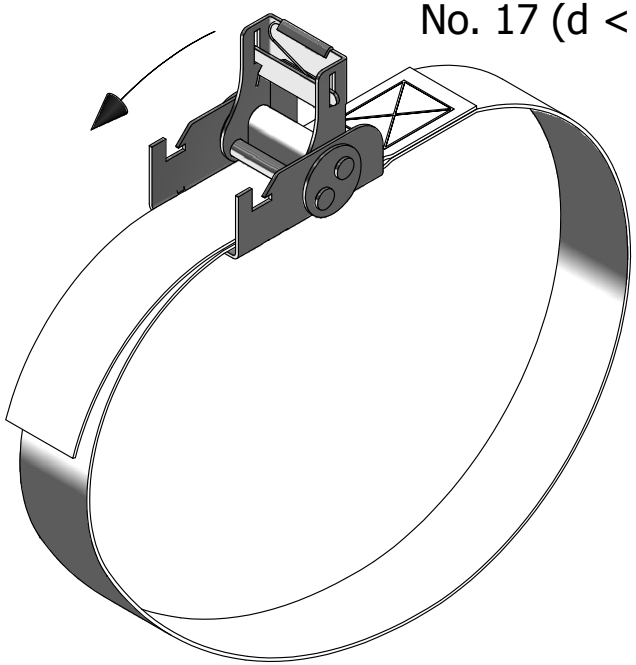

3

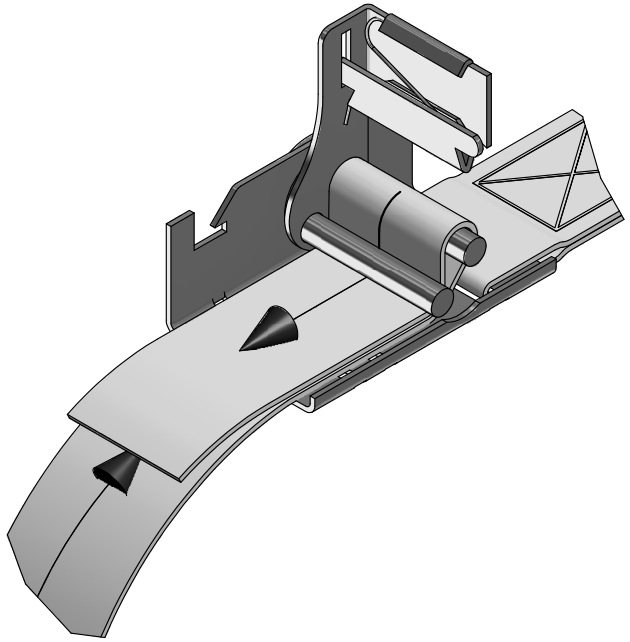

2

4

G003

FabricAir® Installation Drawing
2003-G003-000 (2014-FEB)

No. 18 (508mm [20"] < d < 2032mm[80"])

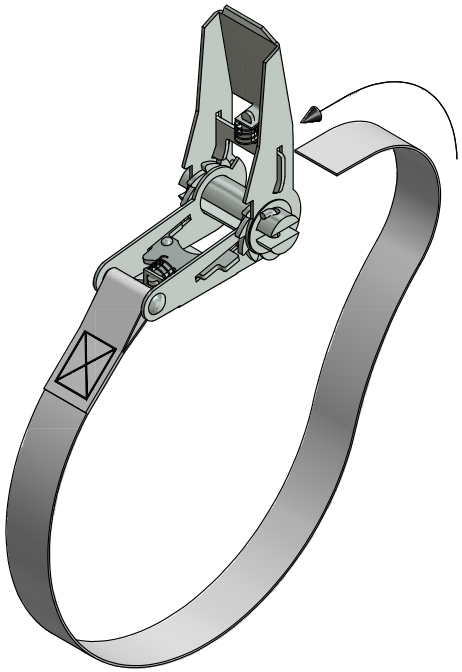

1

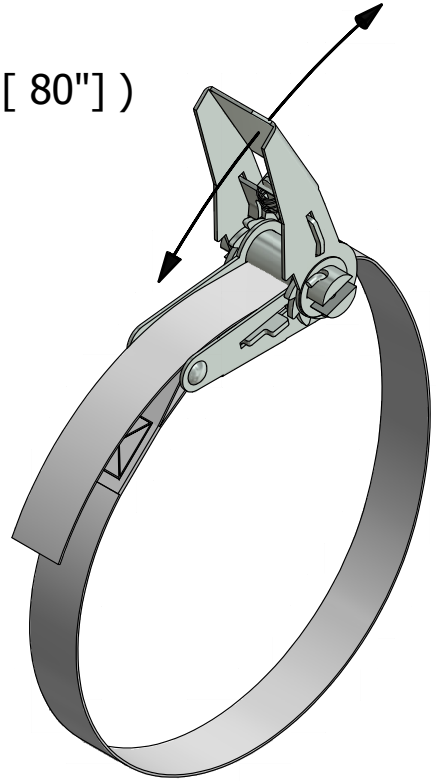

3

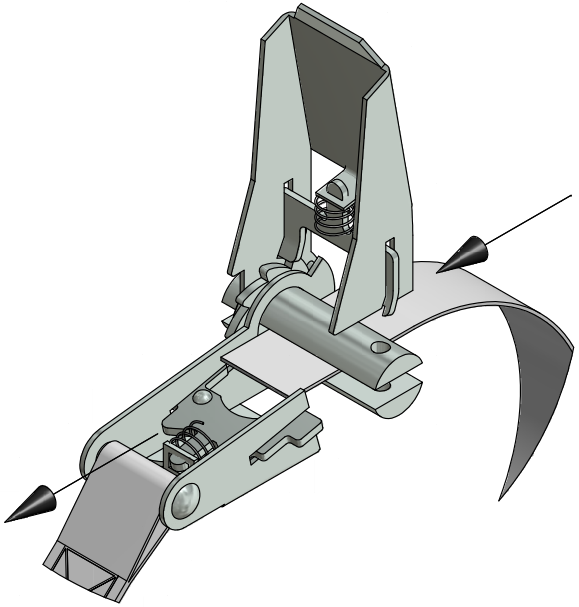

2

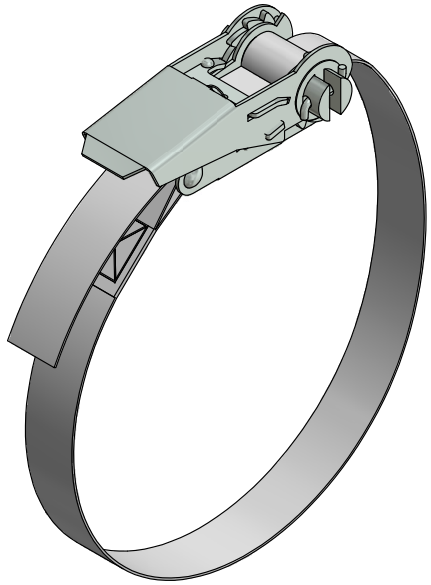

4

G004

FabricAir® Installation Drawing
2003-G004-000 (2014-FEB)

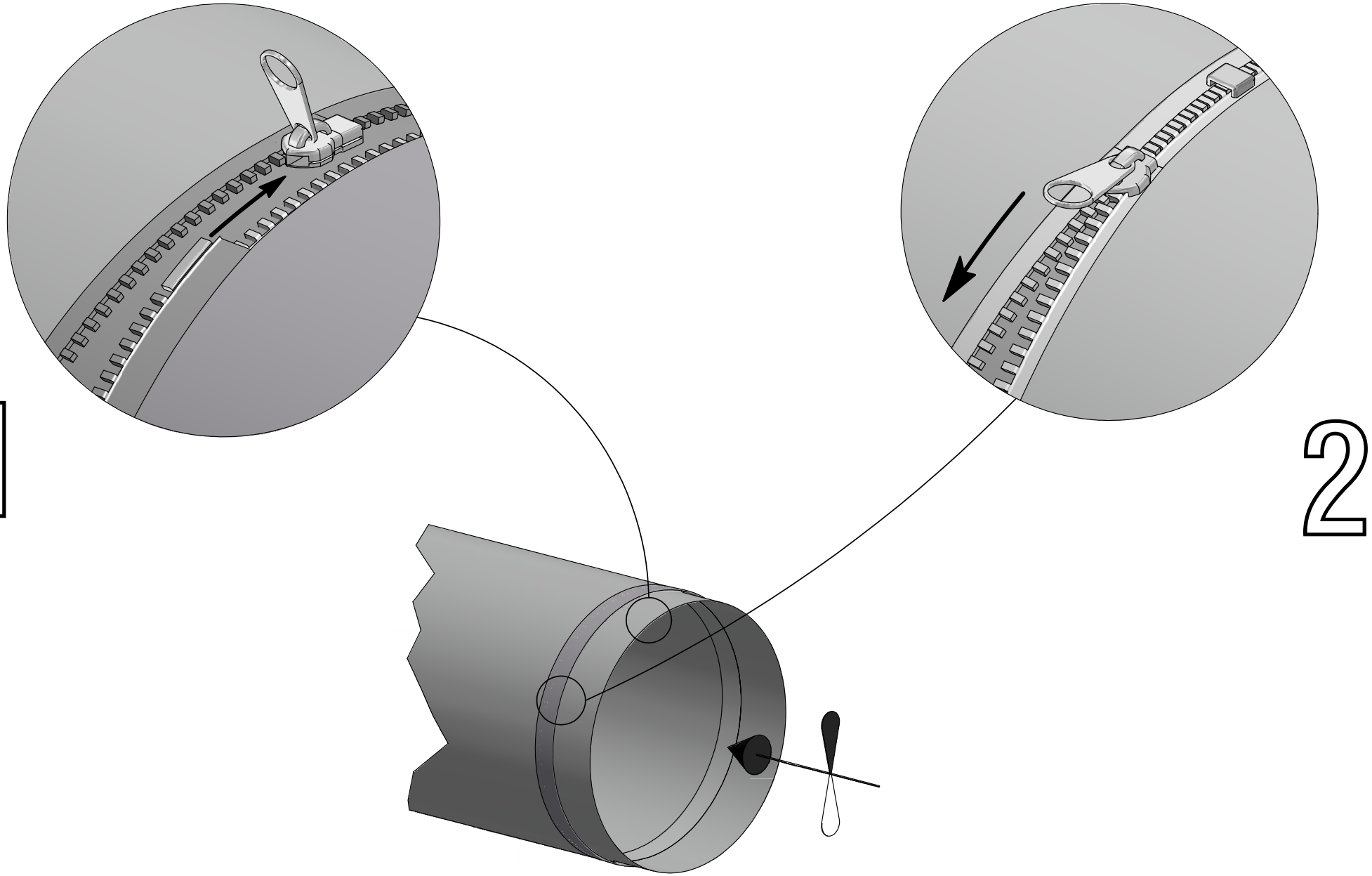

G005

FabricAir® Installation Drawing
2003-G005-000 (2014-FEB)

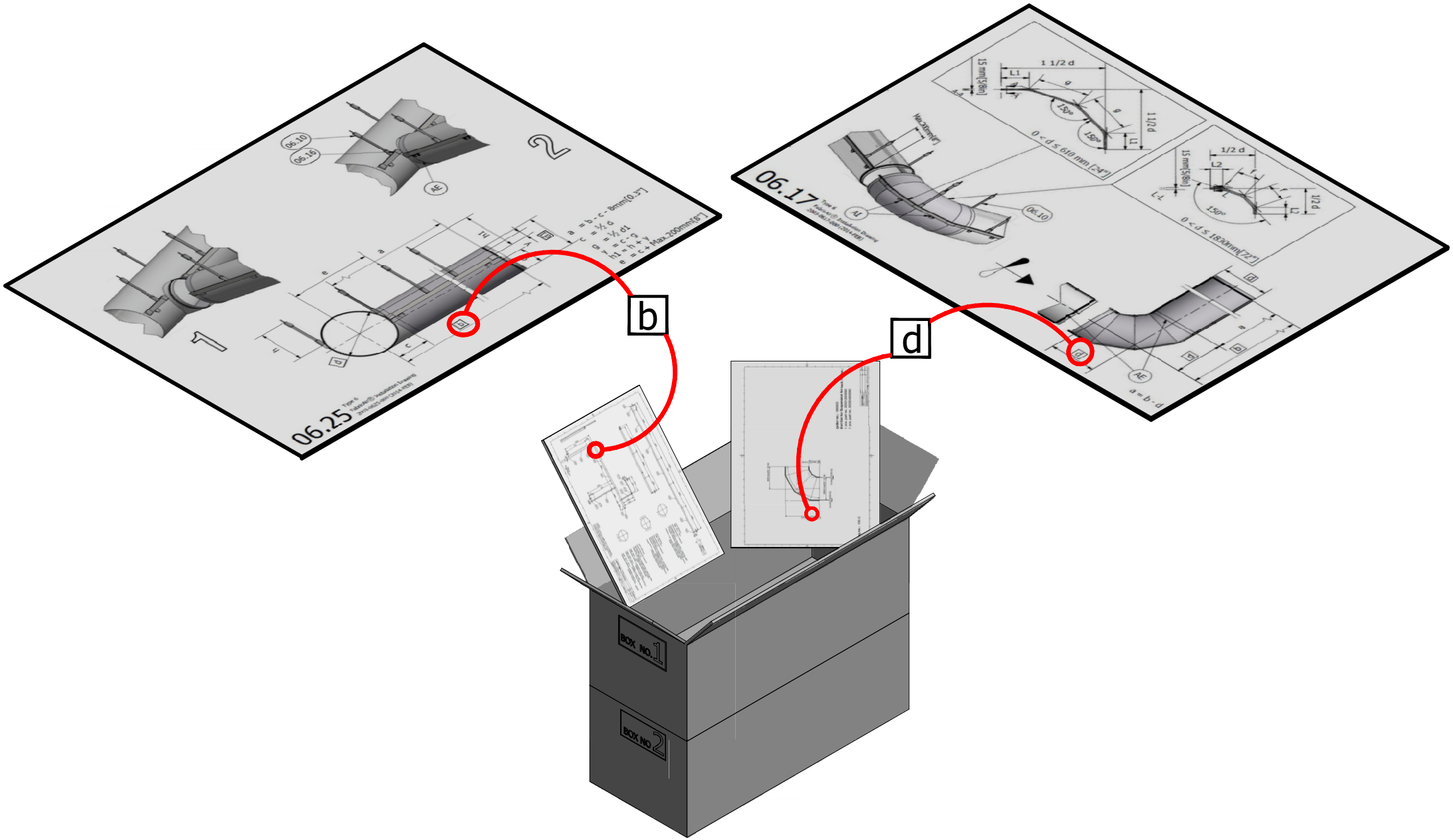

G006

FabricAir® Installation Drawing
2003-G006-000 (2014-FEB)

Note:
The Dimensions given in squares can be found in system drawing which is in box 1 .

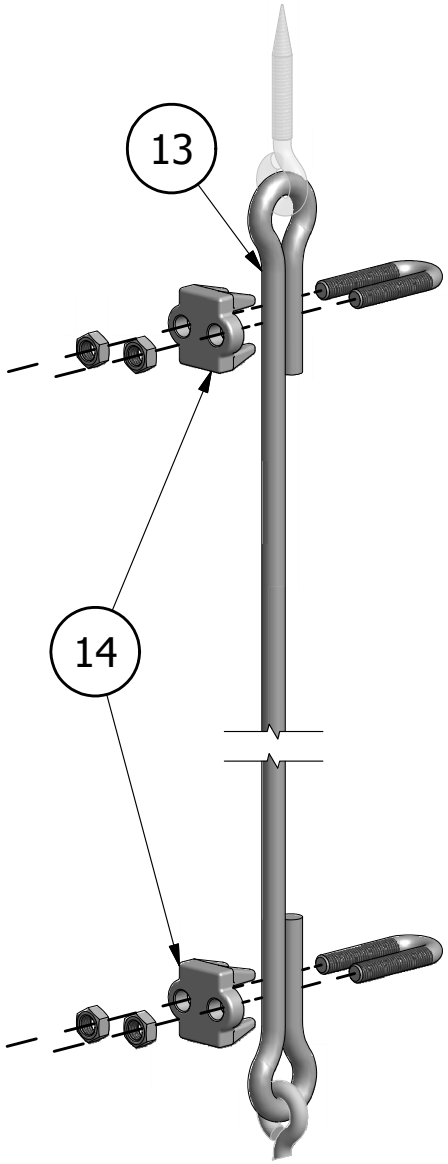

1

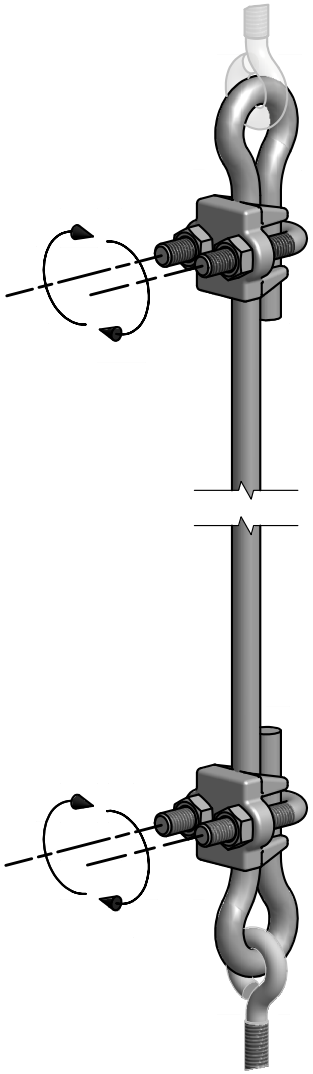

2

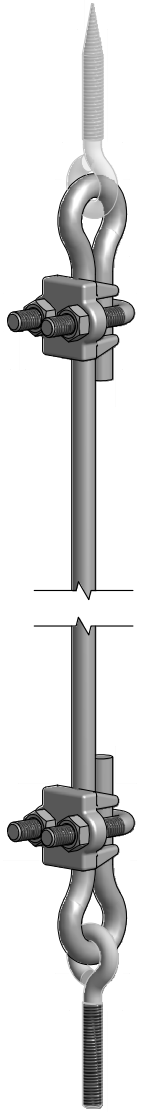

3

G007

FabricAir® Installation Drawing
2003-G007-000 (2014-FEB)

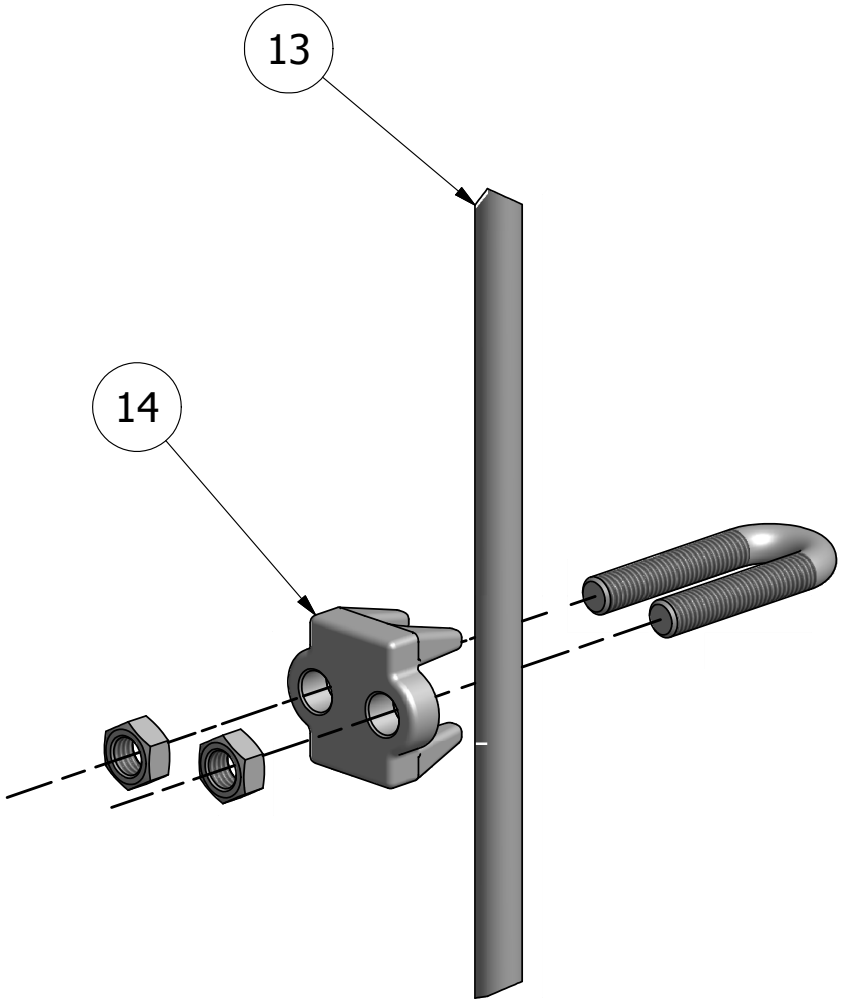

1

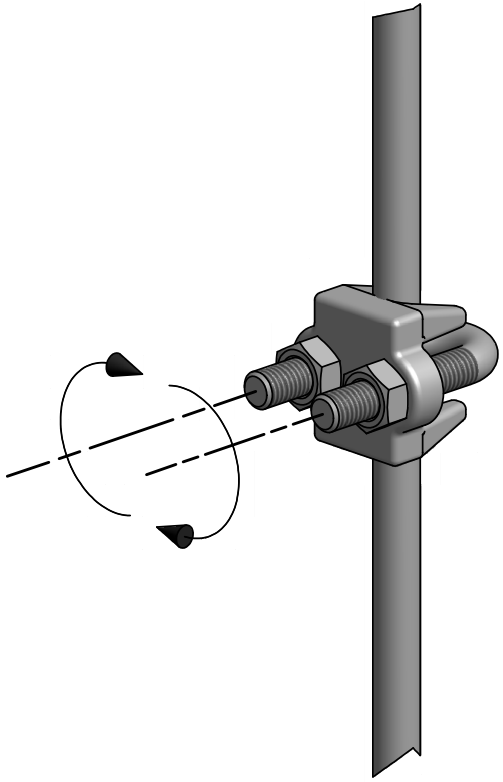

2

G008

FabricAir® Installation Drawing
2003-G008-000(2014-FEB)

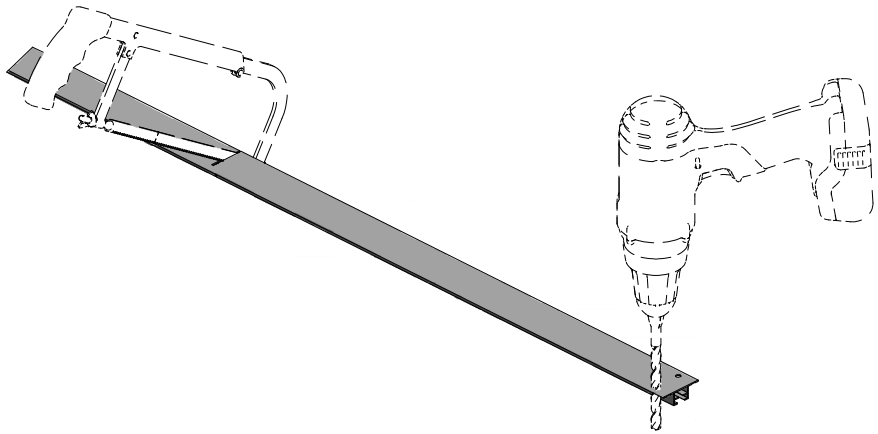

1

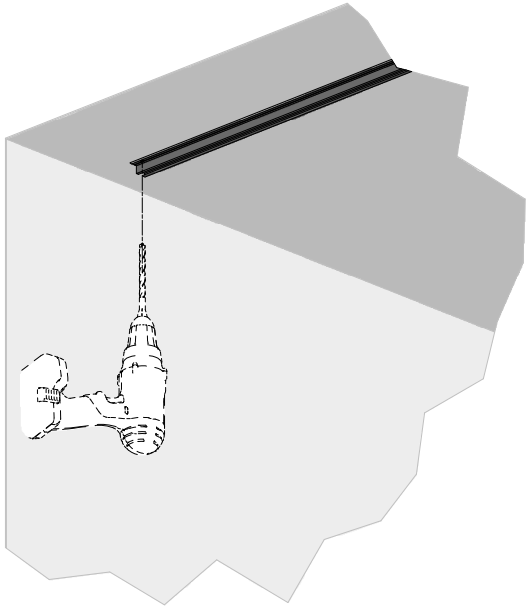

2

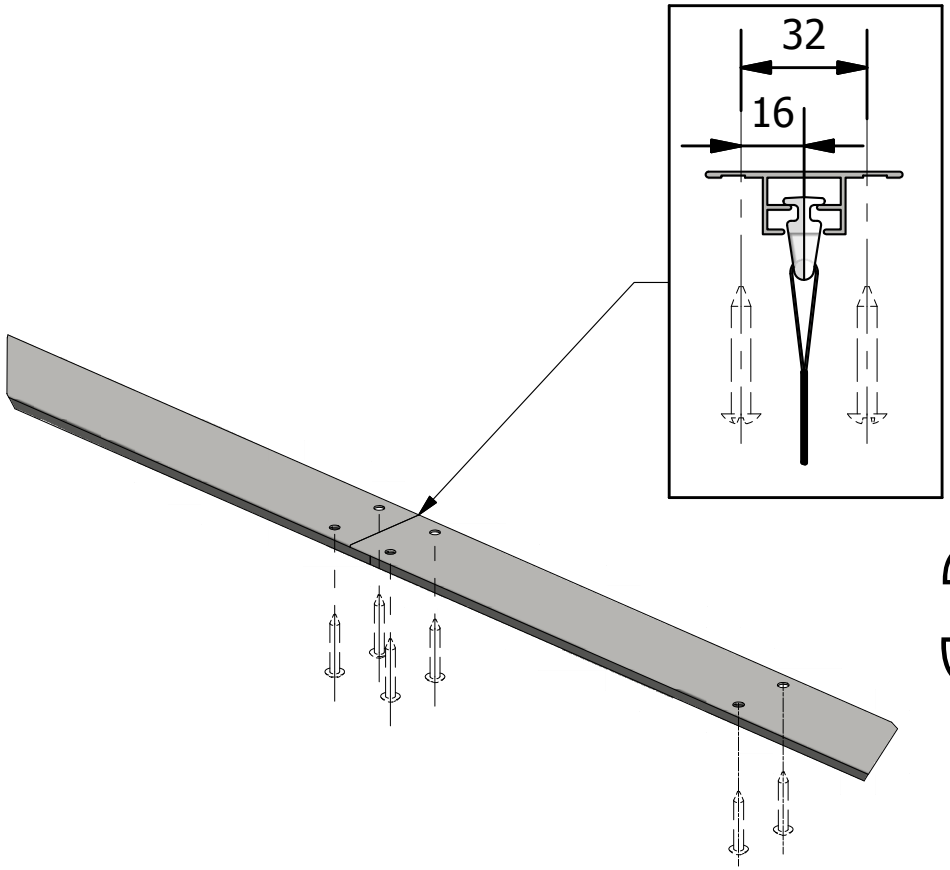

3

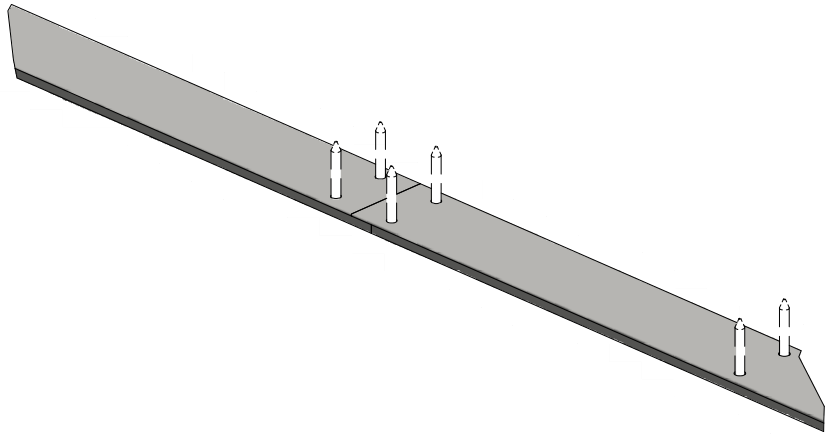

4

G018

FabricAir® Installation Drawing

2003-G018-000 (2014-FEB)

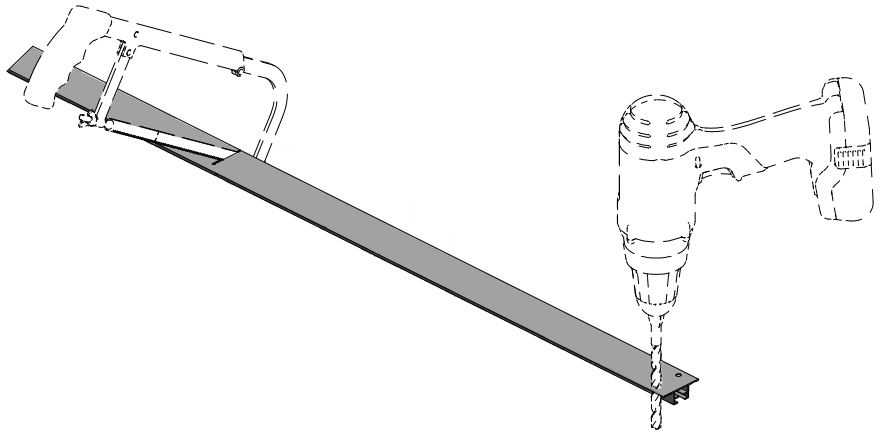

1

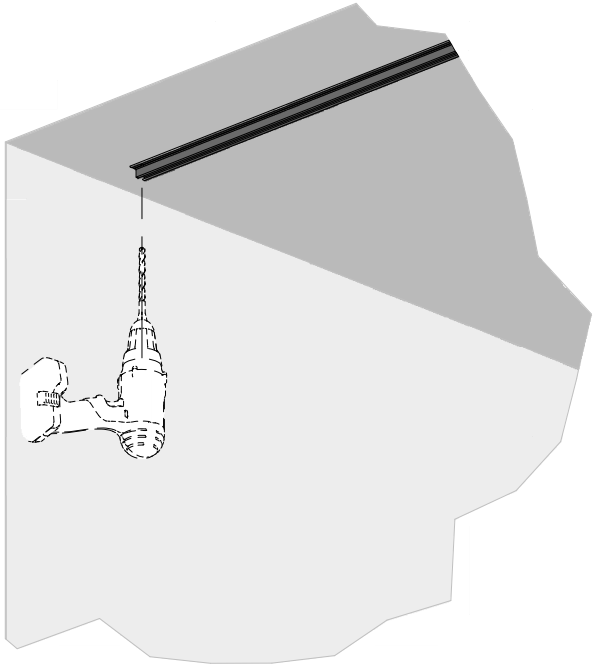

2

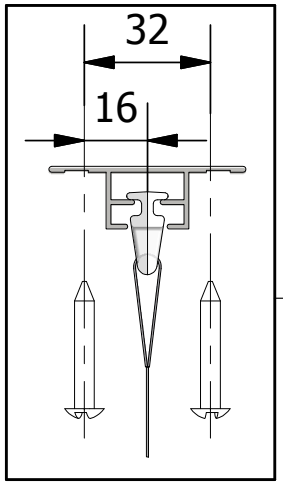

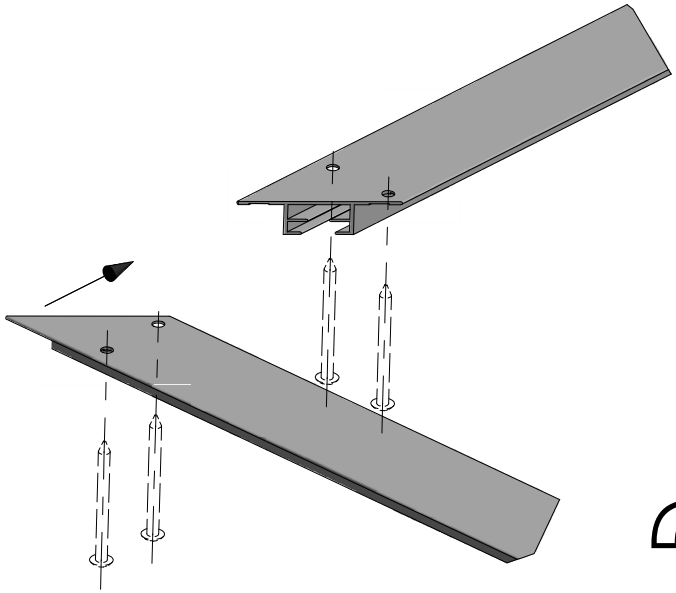

3

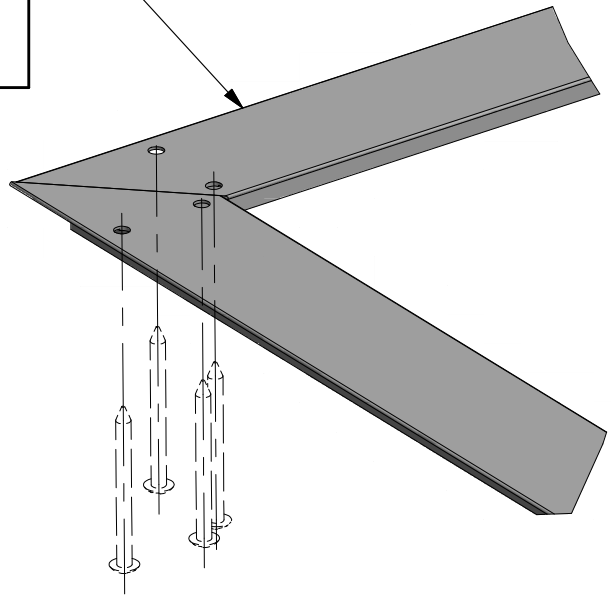

4

G019

FabricAir® Installation Drawing
2003-G019-000 (2014-FEB)

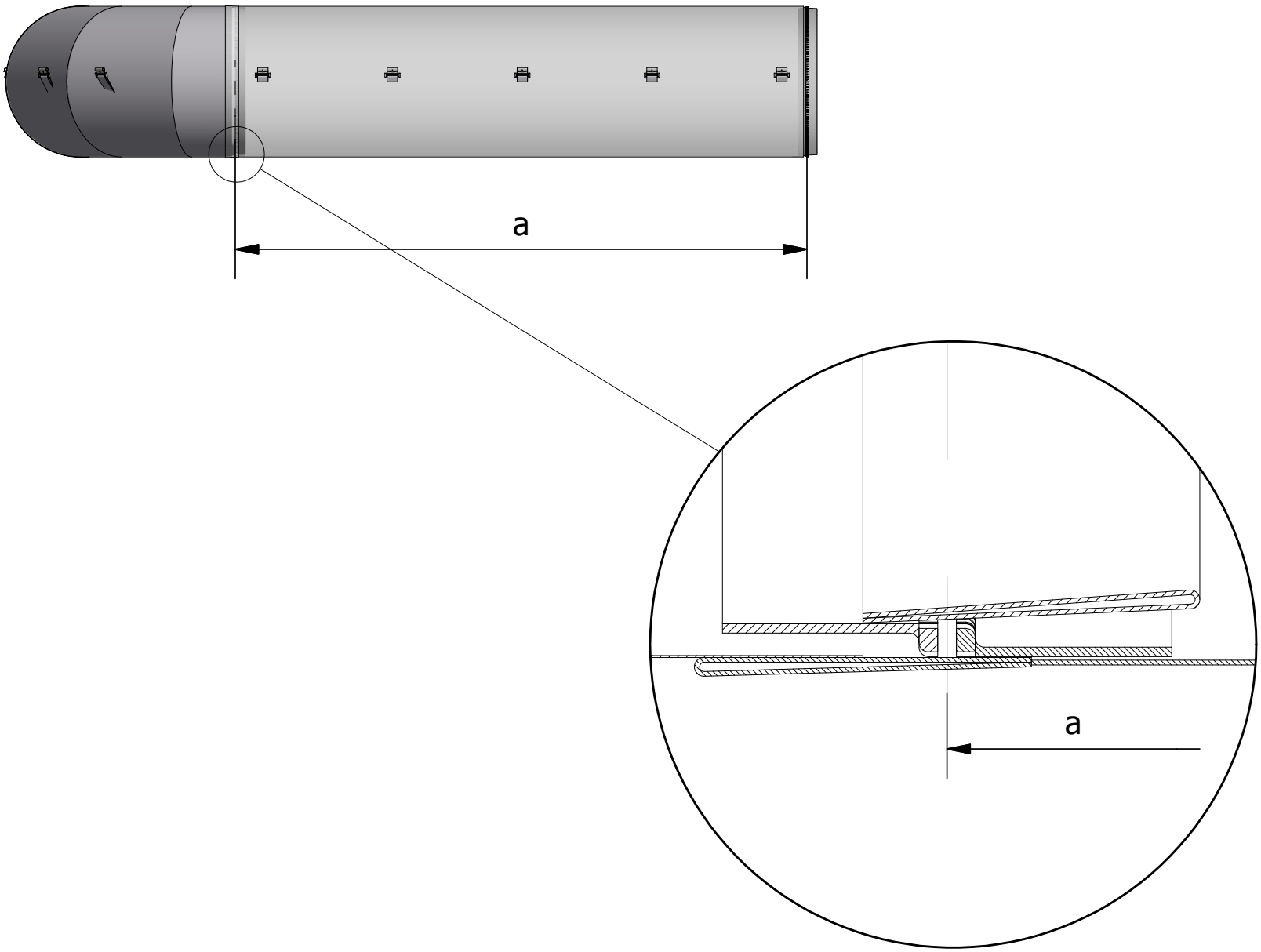

G025

FabricAir® Installation Drawing

2003-G025-000 (2014-FEB)

ASSEMBLY

1

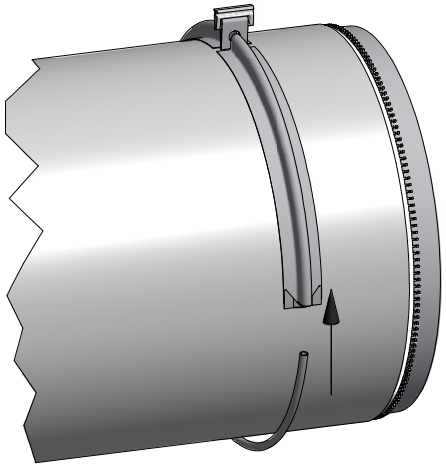

2

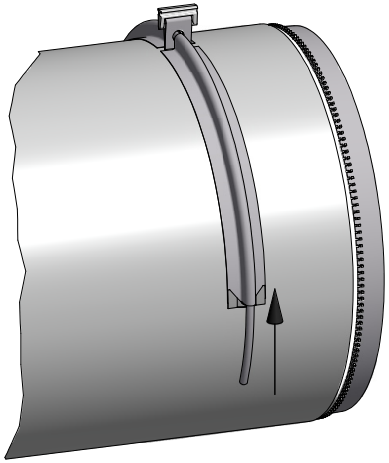

3

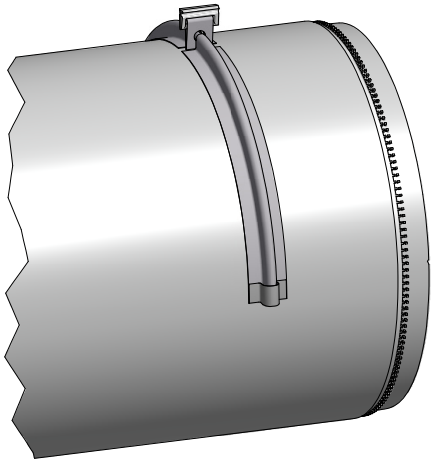

DISASSEMBLY

1

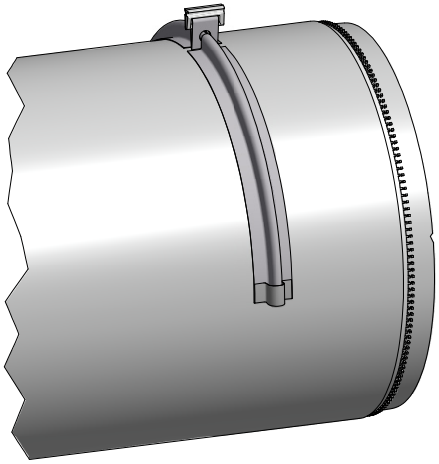

2

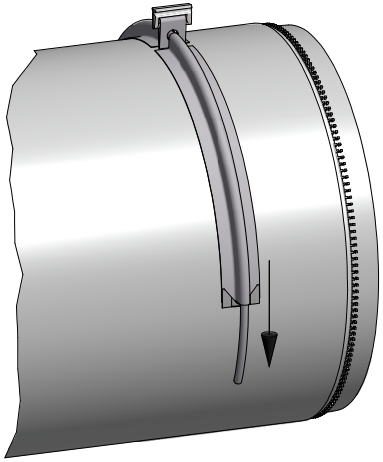

3

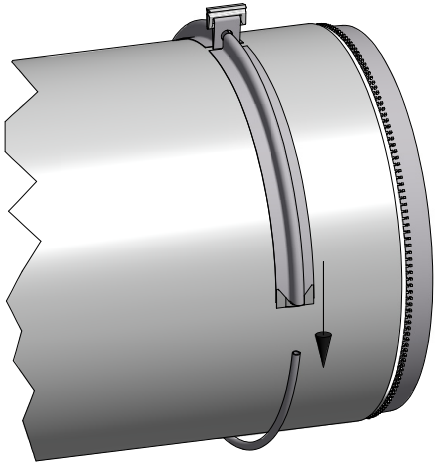

G027 FabricAir® Installation Drawing
2003-G027-000 (2014-FEB)

FabricAir Dispersion Systems
www.fabricair.com

ORDER NO : 1473677

CONTENTS OF BOX NO. 1/2:

INSTRUCTION BAG	1 pcs.
-Drawing Included	1 pcs.

Distribution Ducts

Tag no. 100.1 Inlet Ø 1060 x 100	2 pcs.
Tag no. 100.2 Inlet Ø 1060 x 2625	2 pcs.
Tag no. 100.5 Inlet Ø 500 x 1000 x 9330	2 pcs.

Suspensions

(05) STRETCHER M6 x 90,GV	12 pcs
(14) CABLE LOCK 5MM,GV	52 pcs
(18) FIXING	2 pcs

STRAP , Y/2 , Ø 1100 / 43.3 "W

Box weight : 31 kg

Box size : 780x380x500mm

Label 1/1

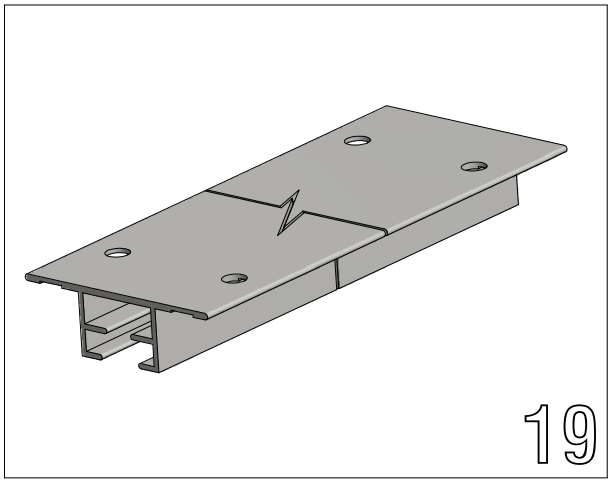
19

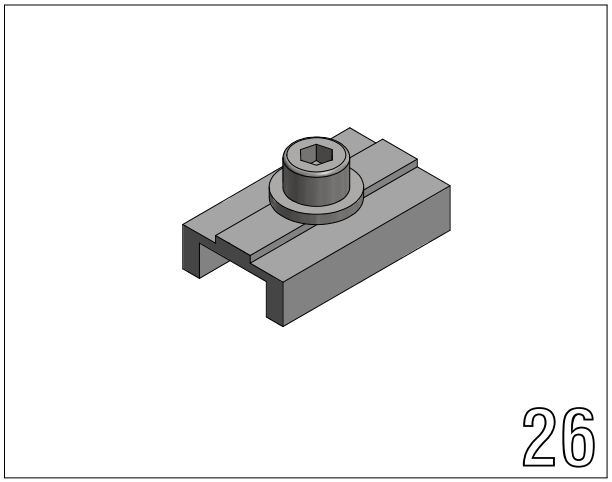
26

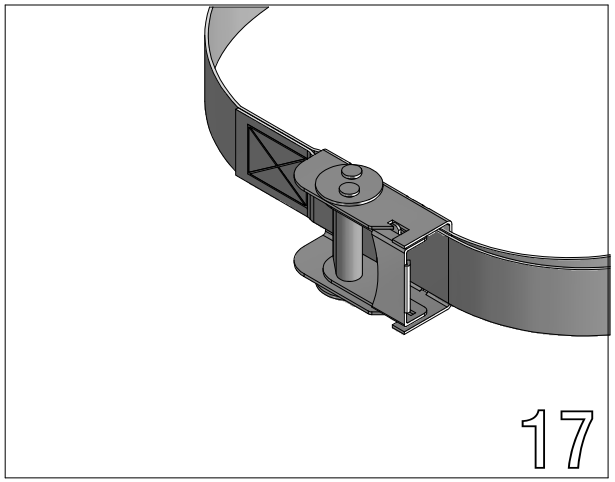
17

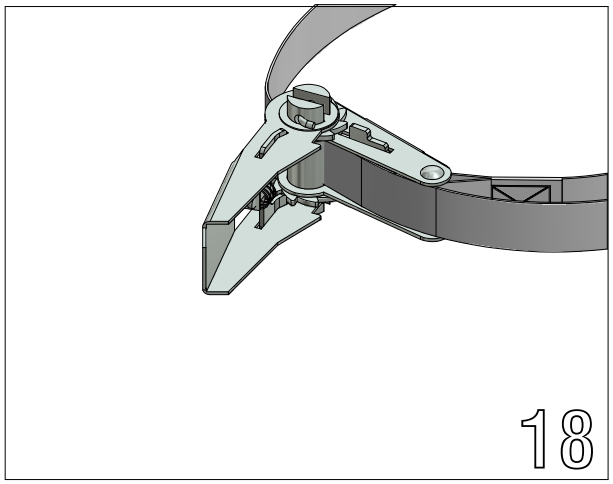
18

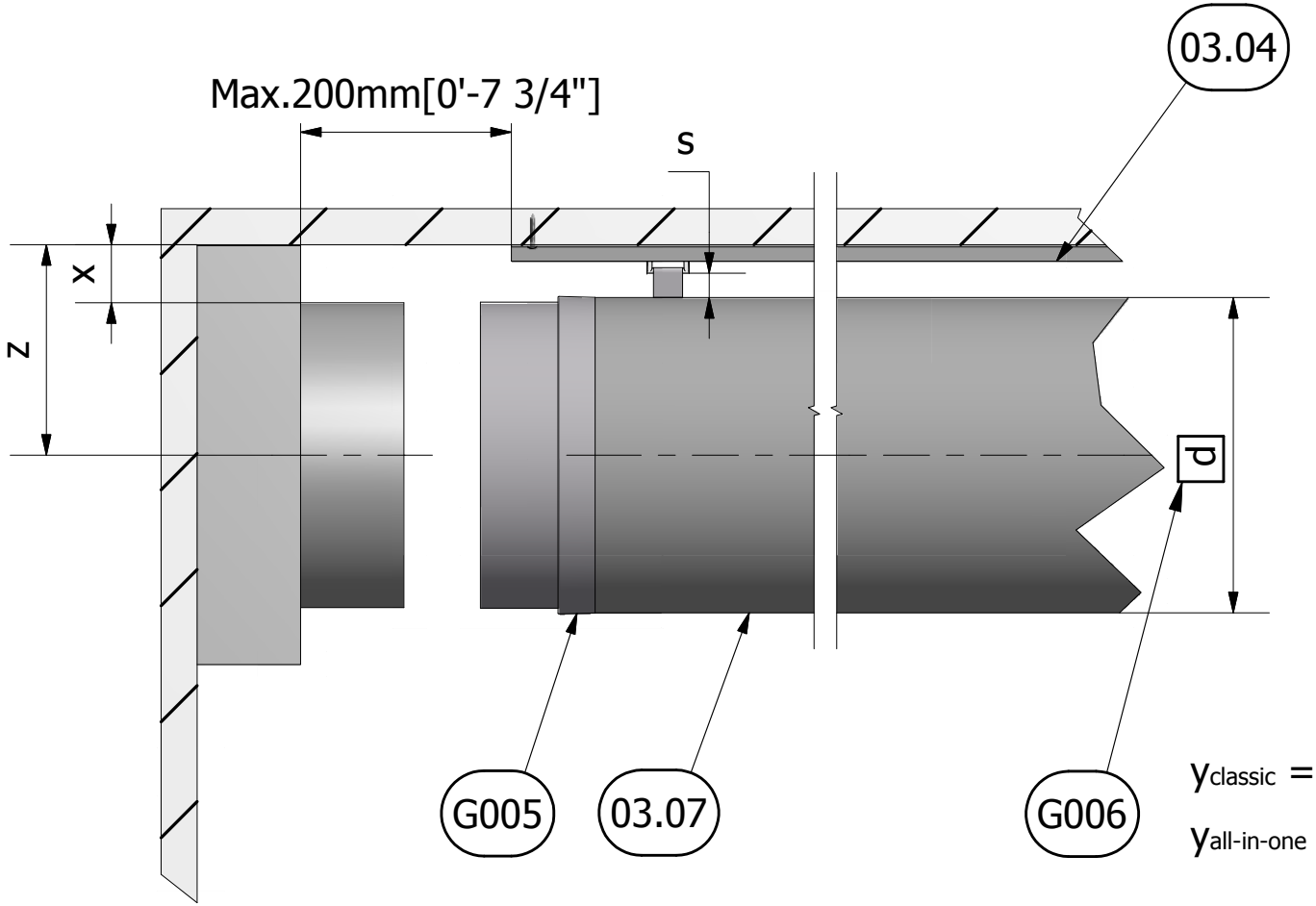

$y_{classic}$ = 40 mm[1.57"]

$y_{all\text{-}in\text{-}one}$ = 60 mm[2.36"]

$z_{classic}$ = ½ d + 40mm[1.57"]

$z_{all\text{-}in\text{-}one}$ = ½ d +60mm[2.36"]

$s_{classic}$ = z - ½ d -10mm[0.4"]

$s_{all\text{-}in\text{-}one}$ = z - ½ d -10mm[0.4"]

$s_{classic\ min}$ = 30mm[1.18"]

$s_{all\text{-}in\text{-}one\ min}$ = 50mm[1.96"]

03.02

Type 3
FabricAir® Installation Drawing
2003-0302-000 (2015-JUN)

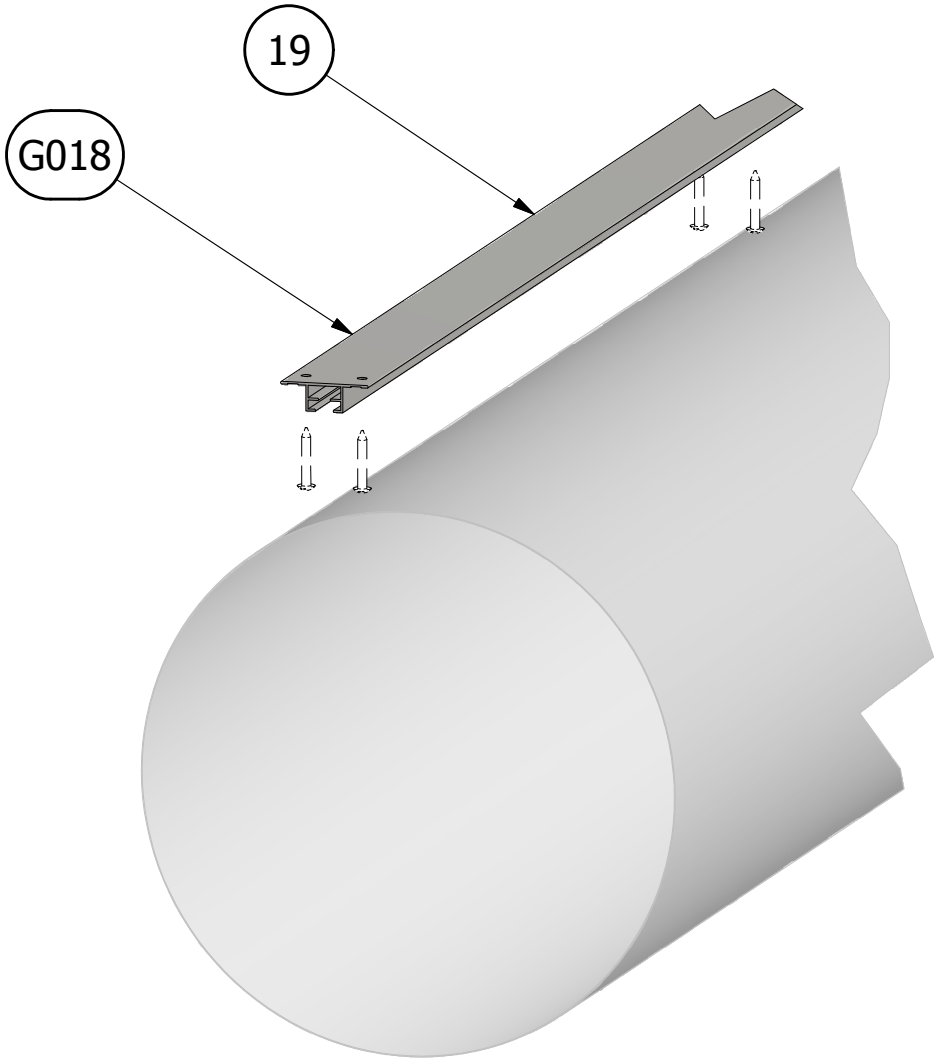

03.03

Type 3
FabricAir® Installation Drawing
2003-0303-000 (2014-FEB)

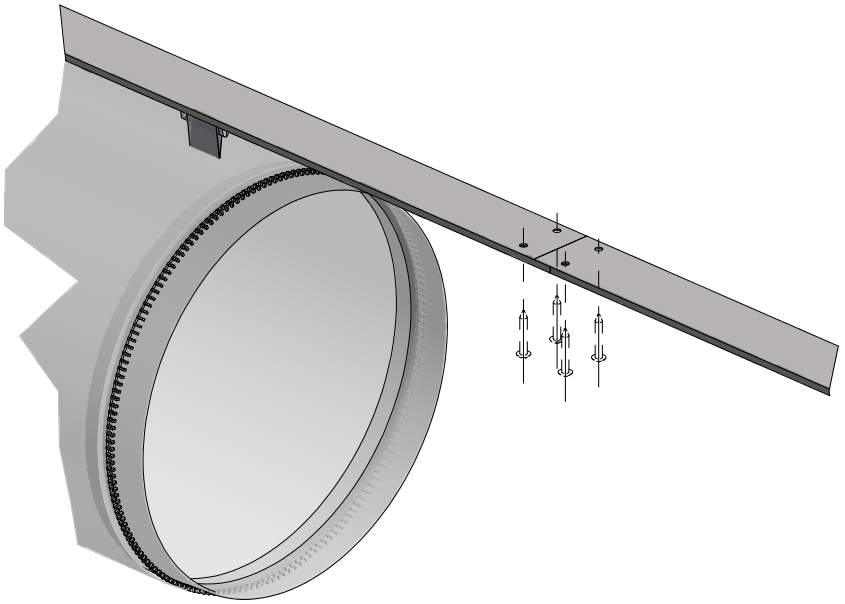

1

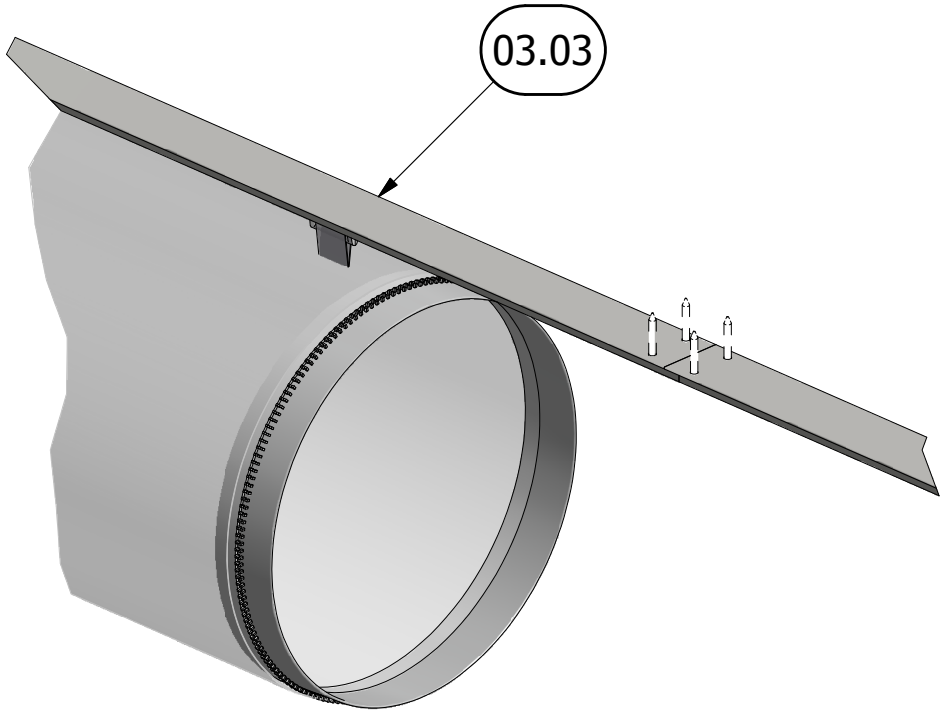

2

03.04

Type 3

FabricAir® Installation Drawing

2003-0304-000 (2014-FEB)

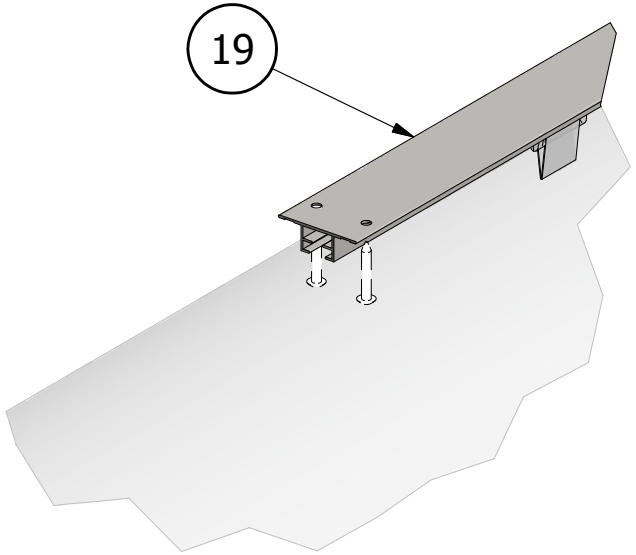

1

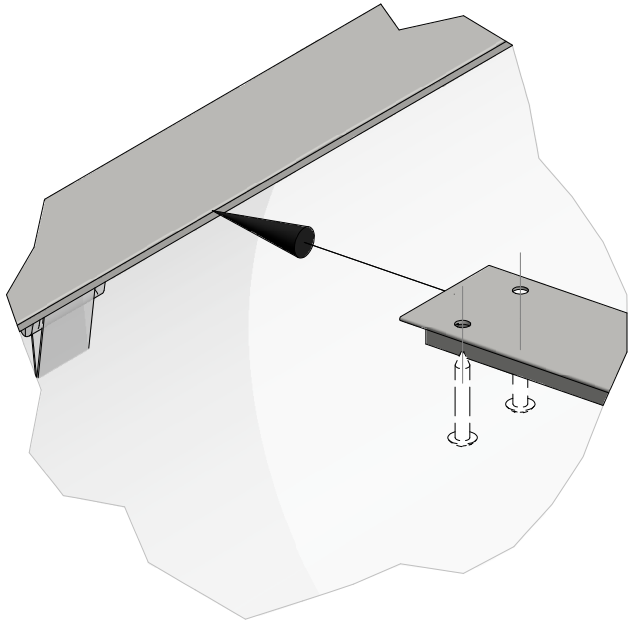

2

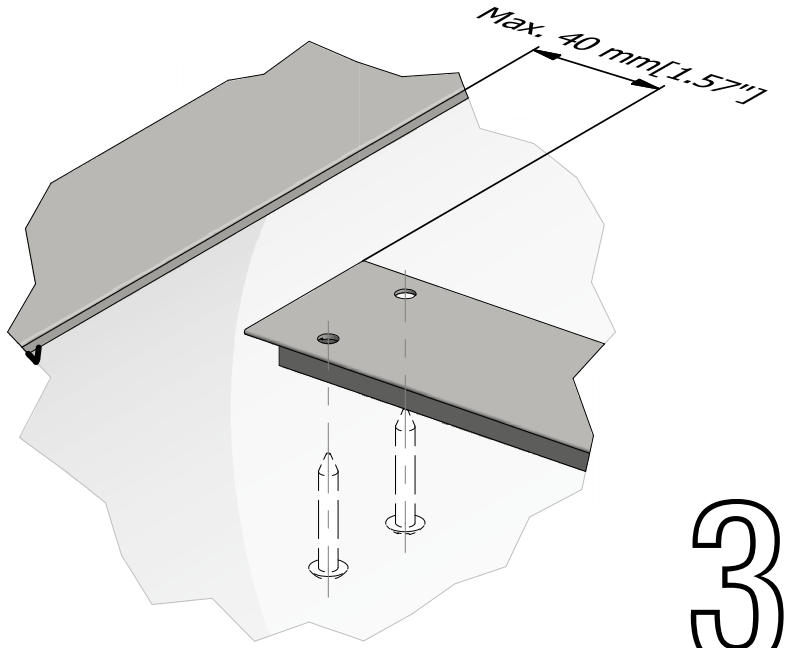

3

03.05

Type 3
FabricAir® Installation Drawing
2003-0305-000 (2014-FEB)

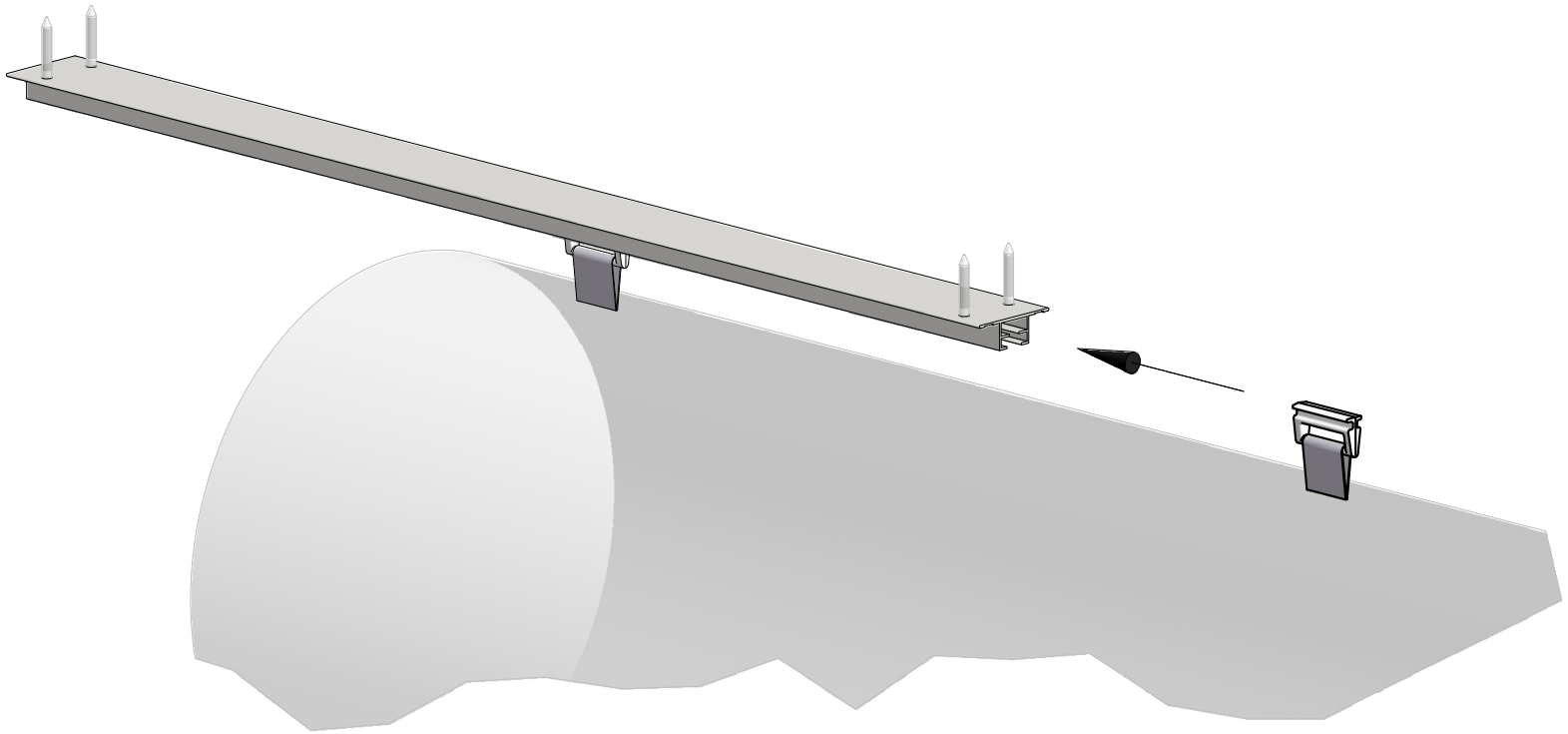

03.06

Type 3
FabricAir® Installation Drawing
2003-0306-000 (2014-FEB)

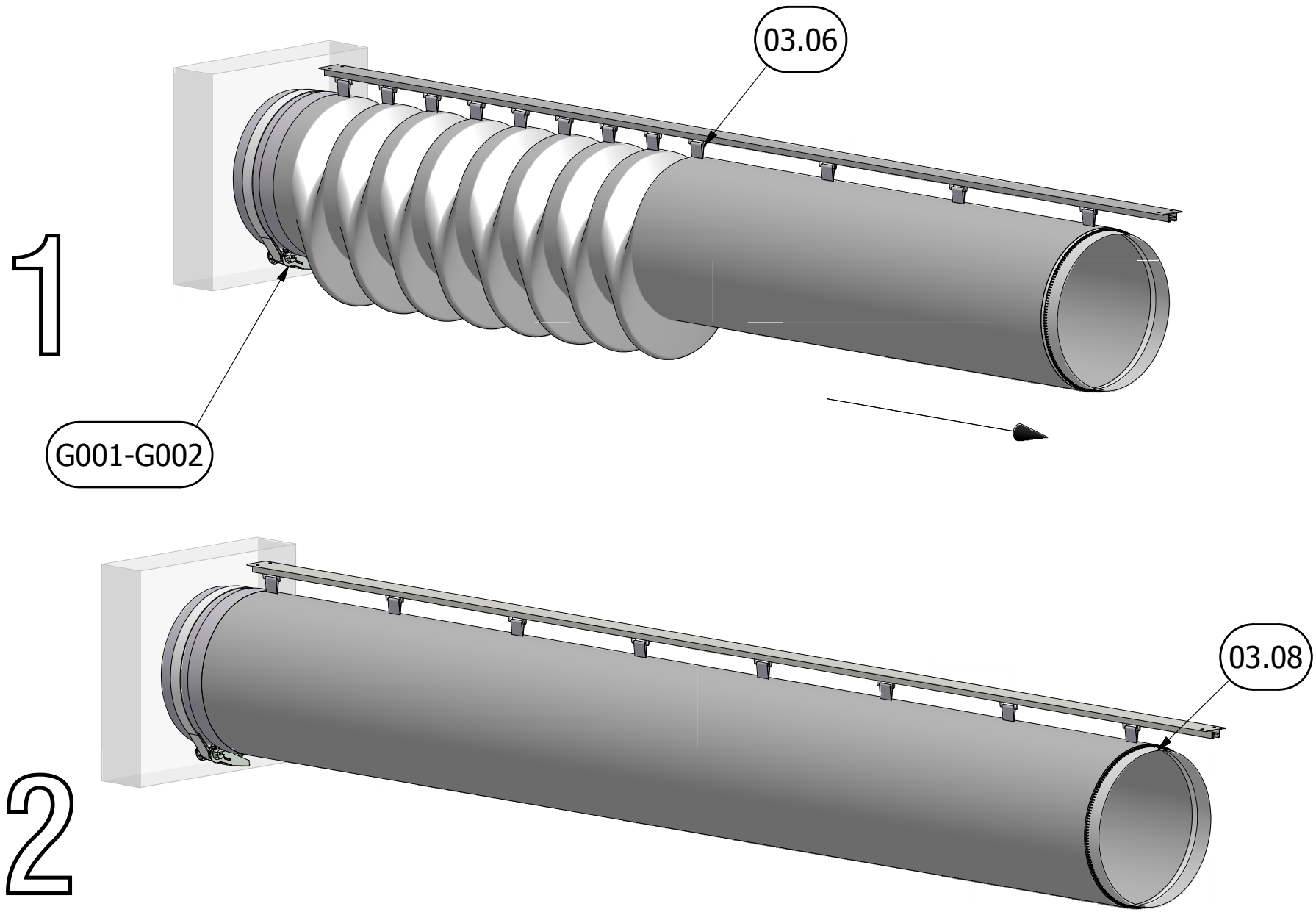

03.07

Type 3
FabricAir® Installation Drawing
2003-0307-000 (2014-FEB)

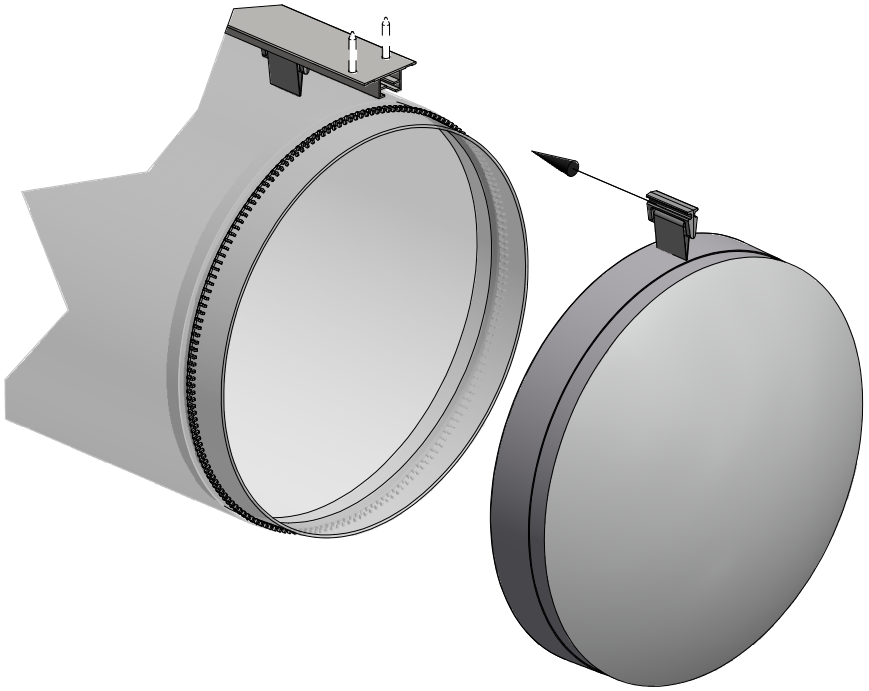

1

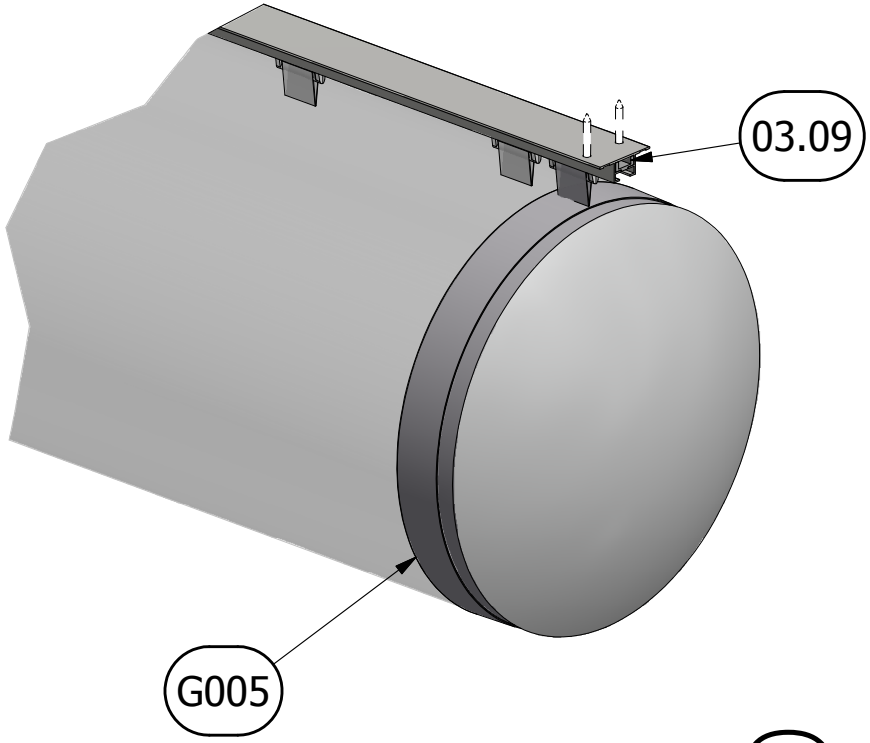

2

03.08

Type 3
FabricAir® Installation Drawing
2003-0308-000 (2014-FEB)

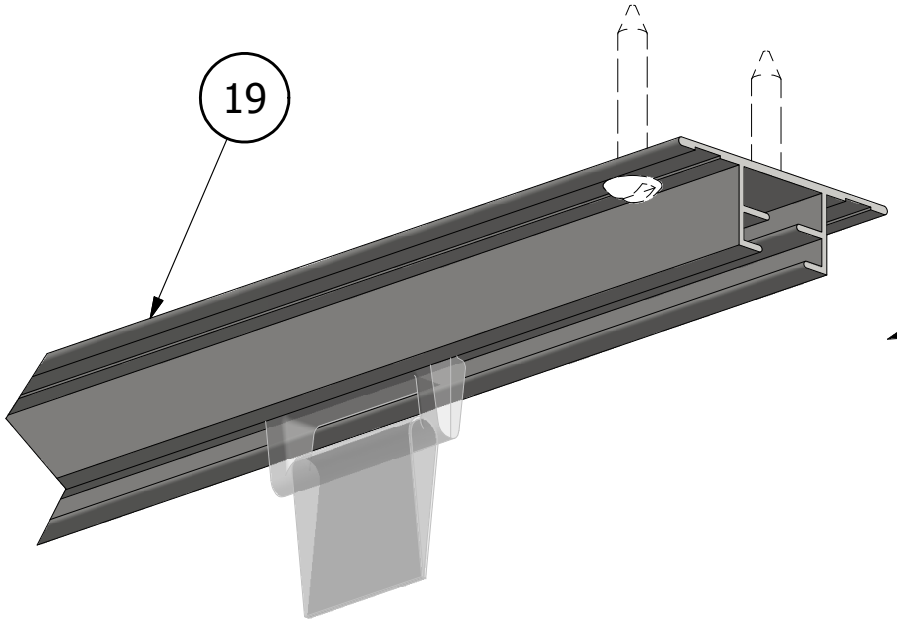

1

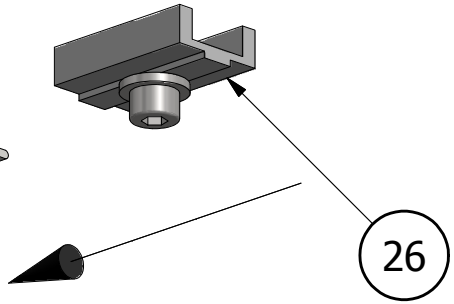

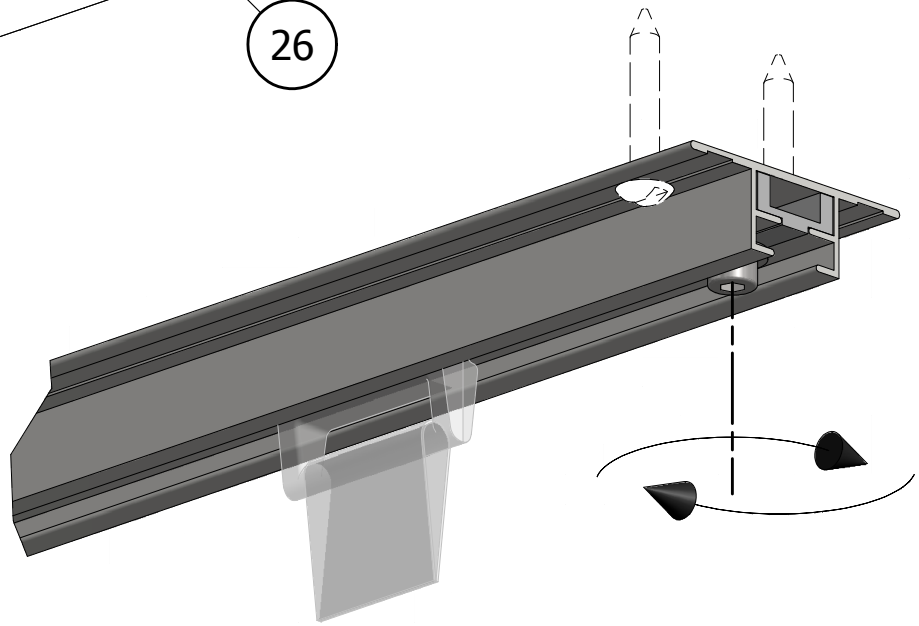

2

03.09

Type 3
FabricAir® Installation Drawing
2003-0309-000 (2014-FEB)

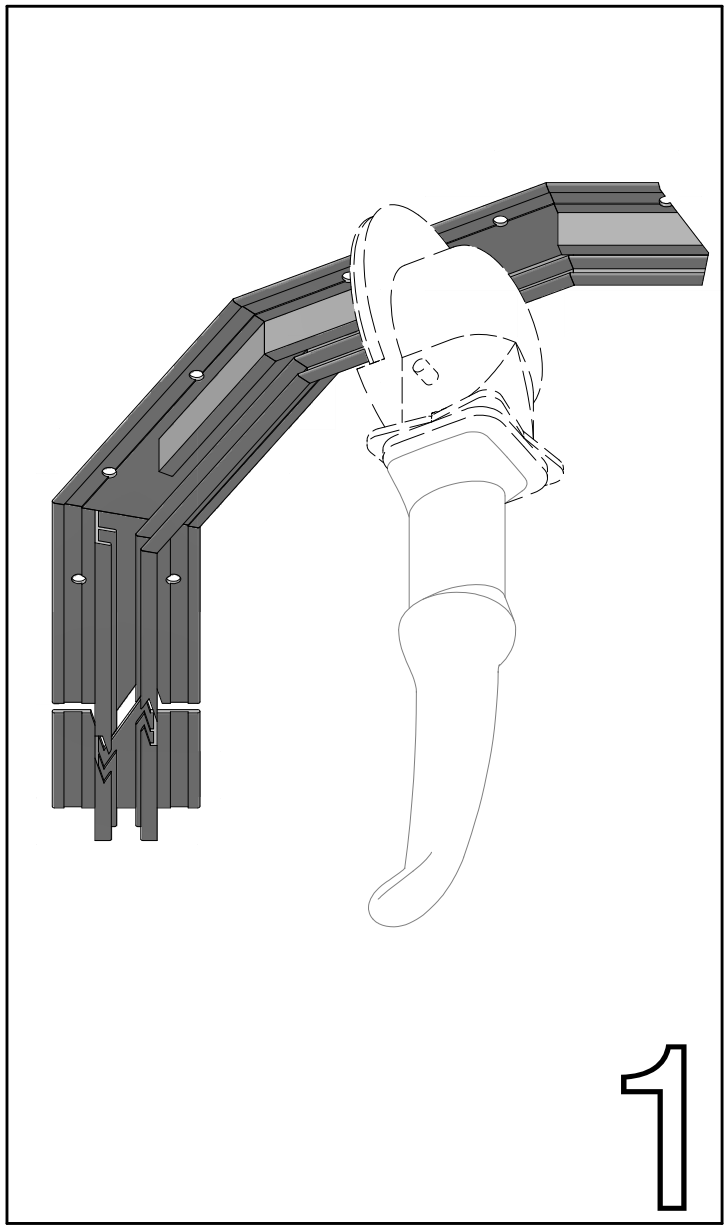

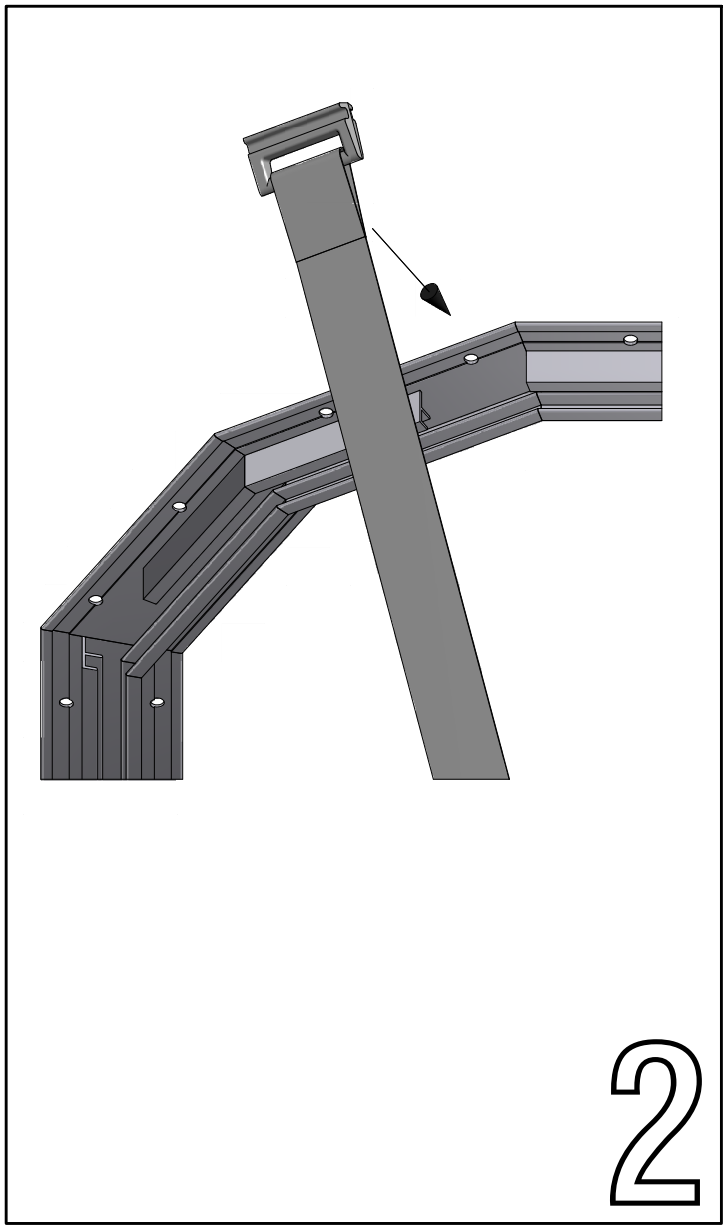

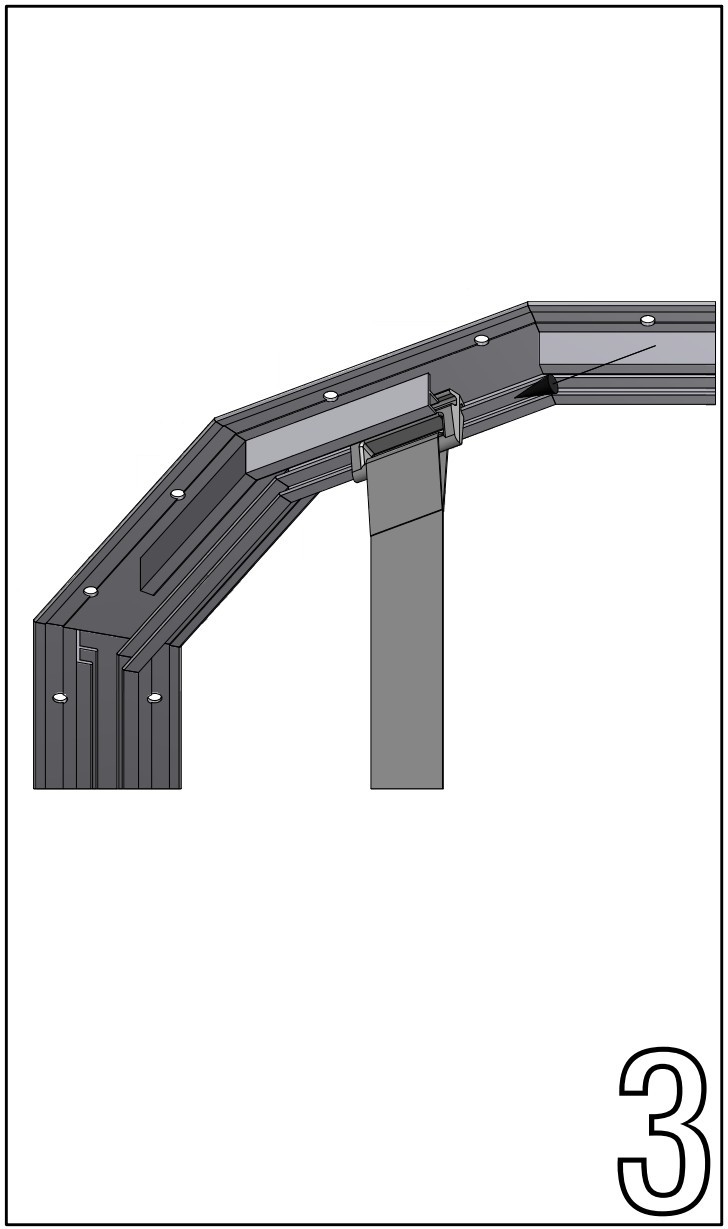

03.10

Type 3

FabricAir® Installation Drawing

2003-0310-000(2014-FEB)

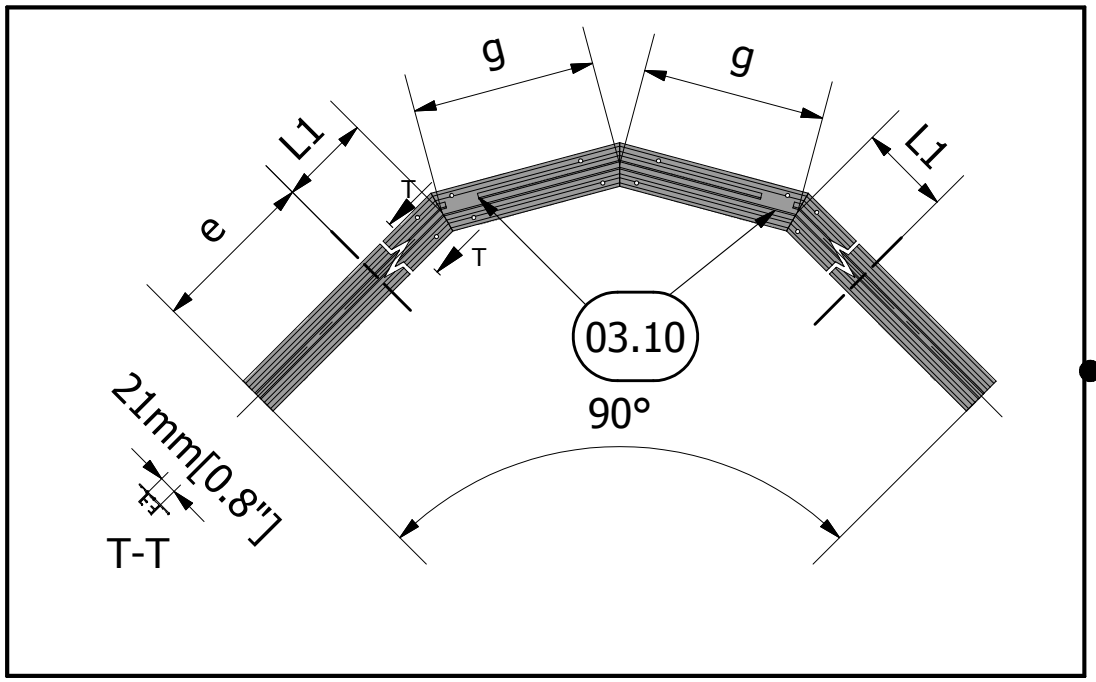

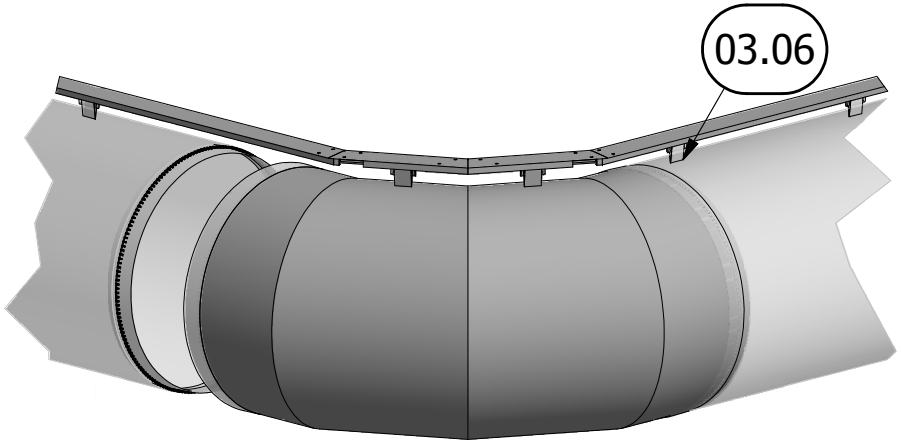

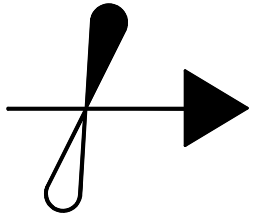

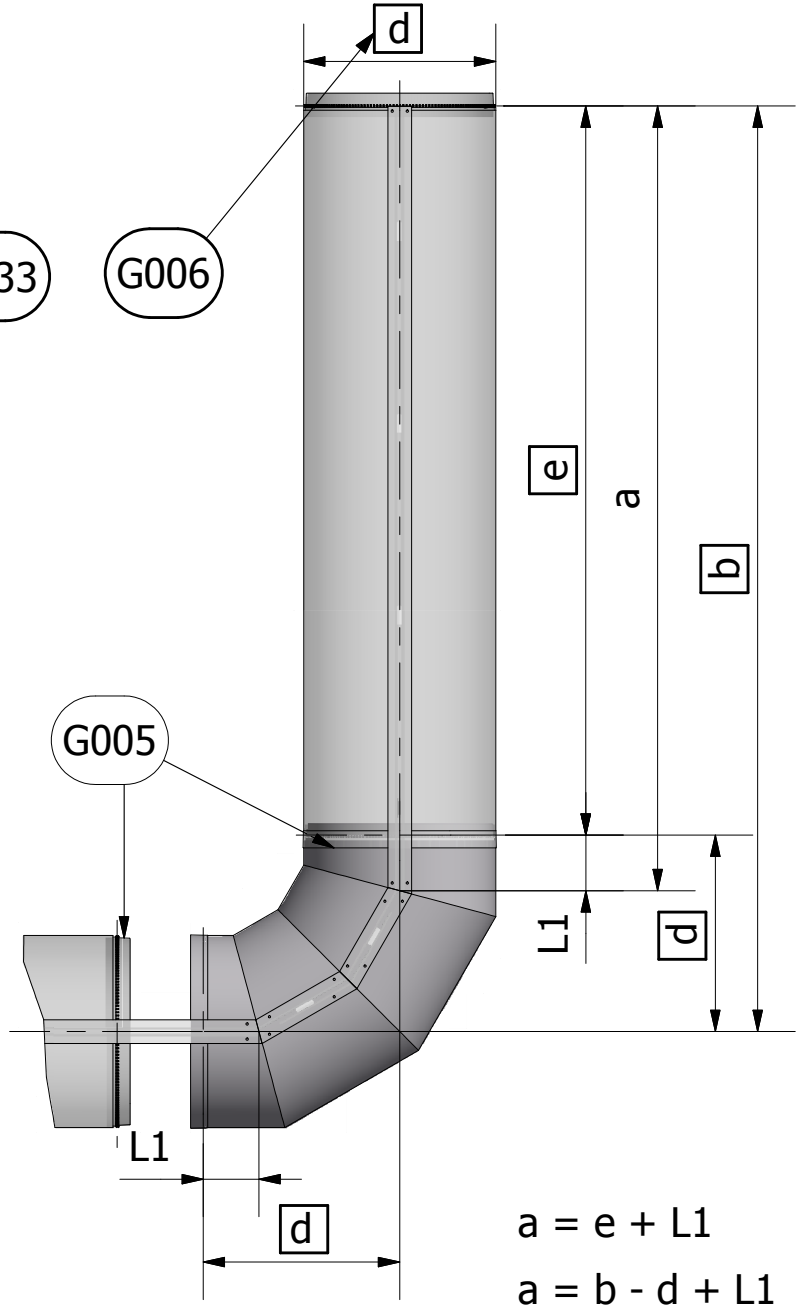

a = e + L1

a = b - d + L1

L1,g ⟶ 03.33

03.11

Type 3

FabricAir® Installation Drawing

2003-0311-000 (2014-FEB)

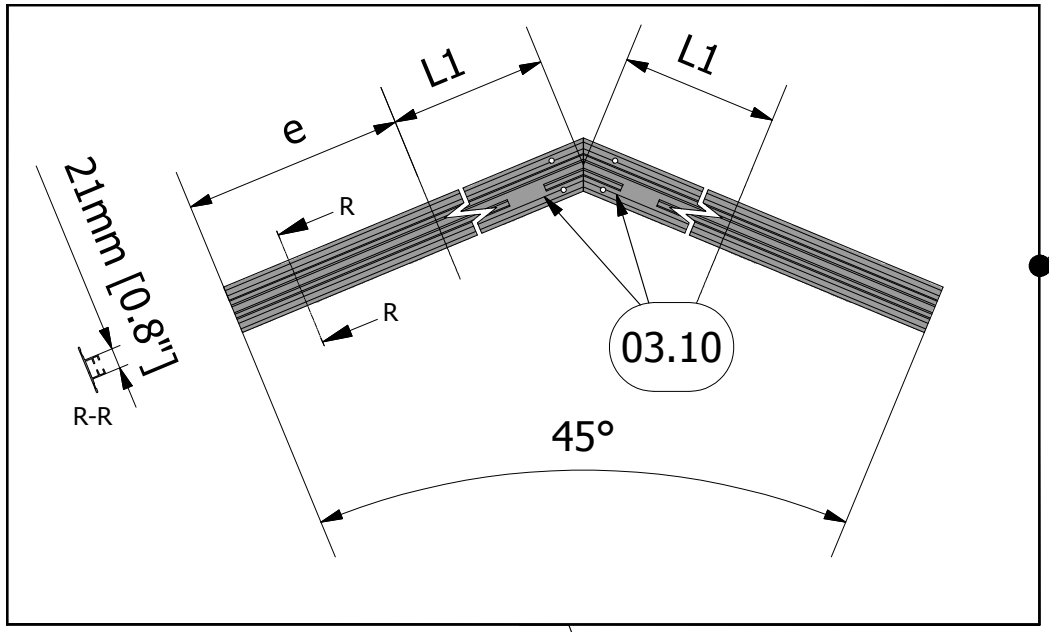

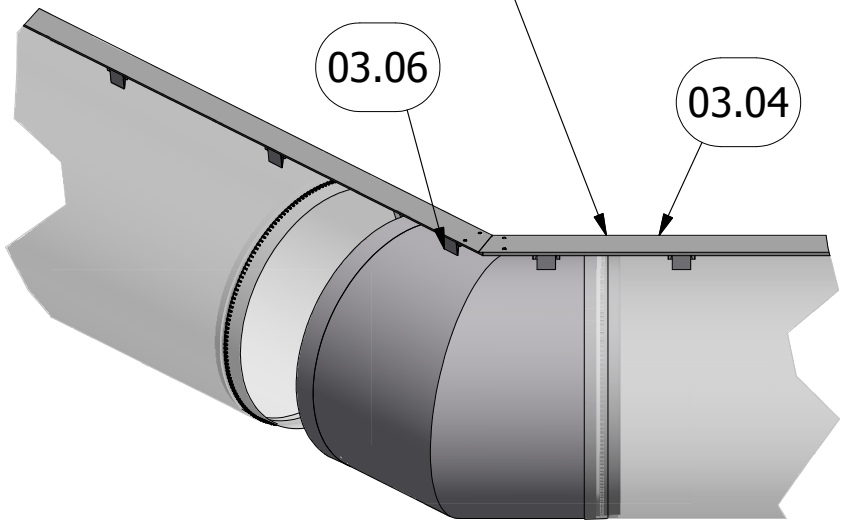

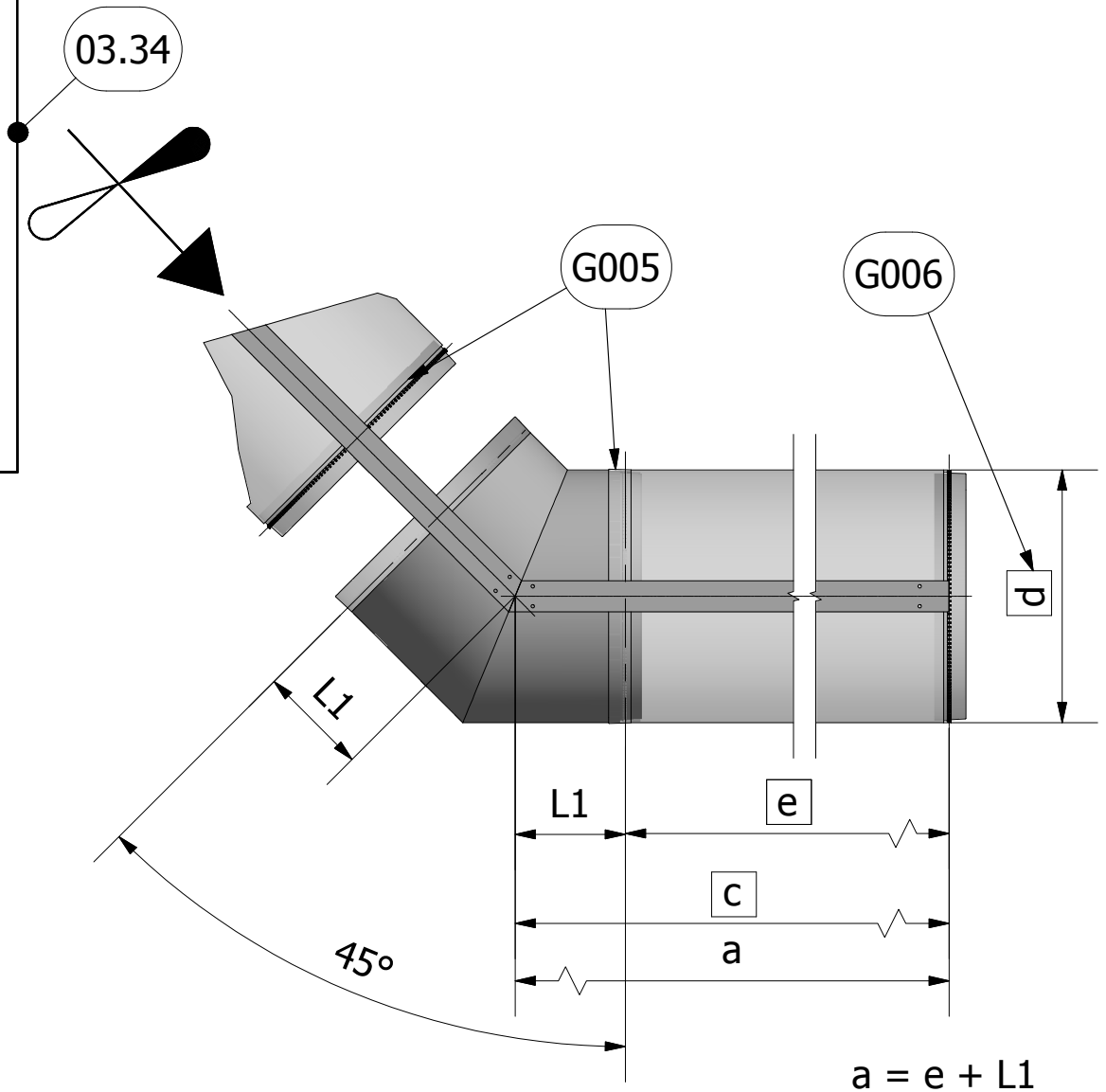

a = e + L1

a = c

L1⟶ 03.34

03.12

Type 3

FabricAir® Installation Drawing

2003-0312-000 (2014-FEB)

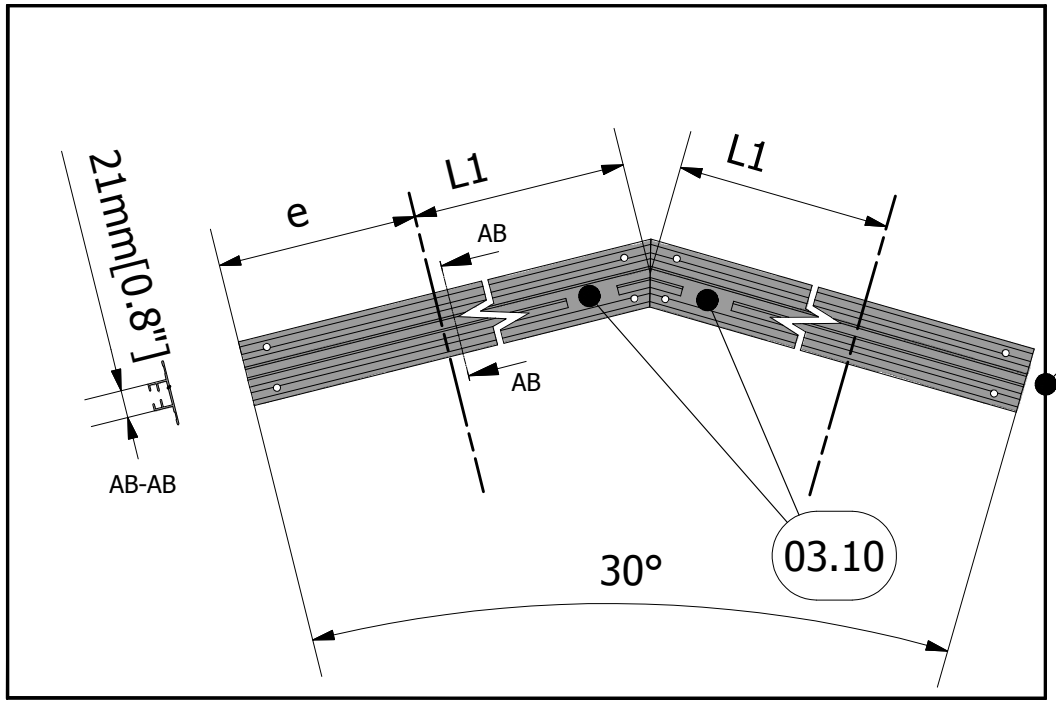

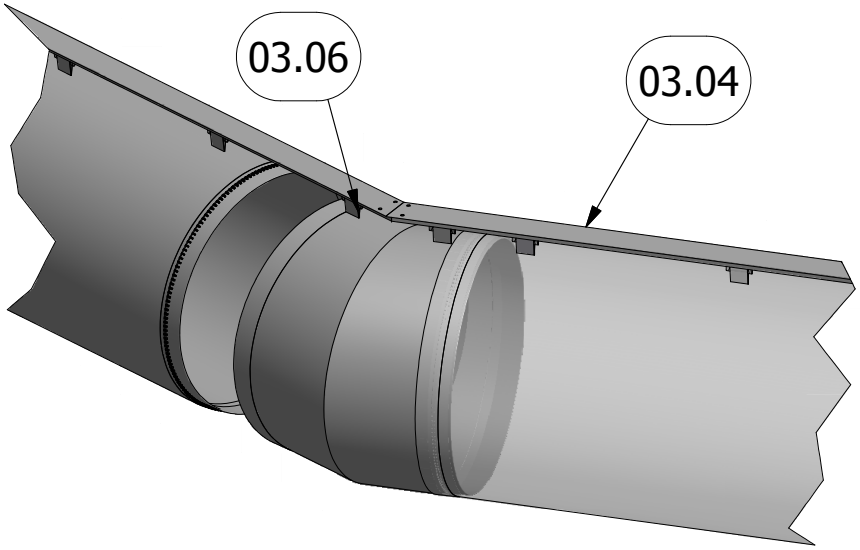

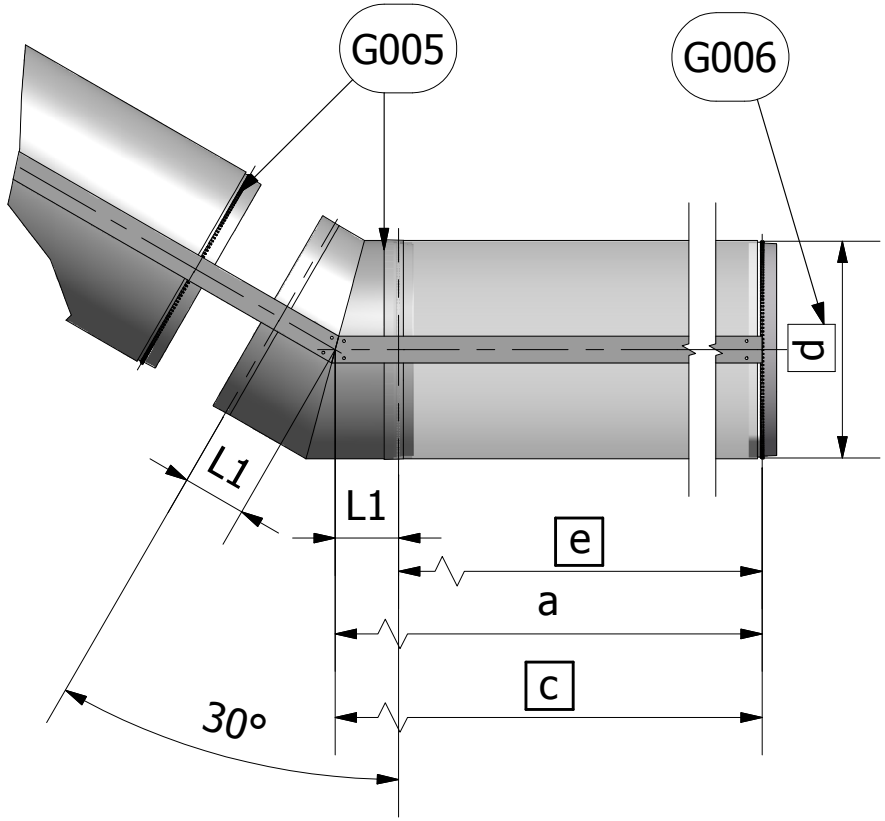

a = c

a = e + L1

L1⟶ 03.35

03.13

Type 3

FabricAir® Installation Drawing

2003-0313-000 (2014-FEB)

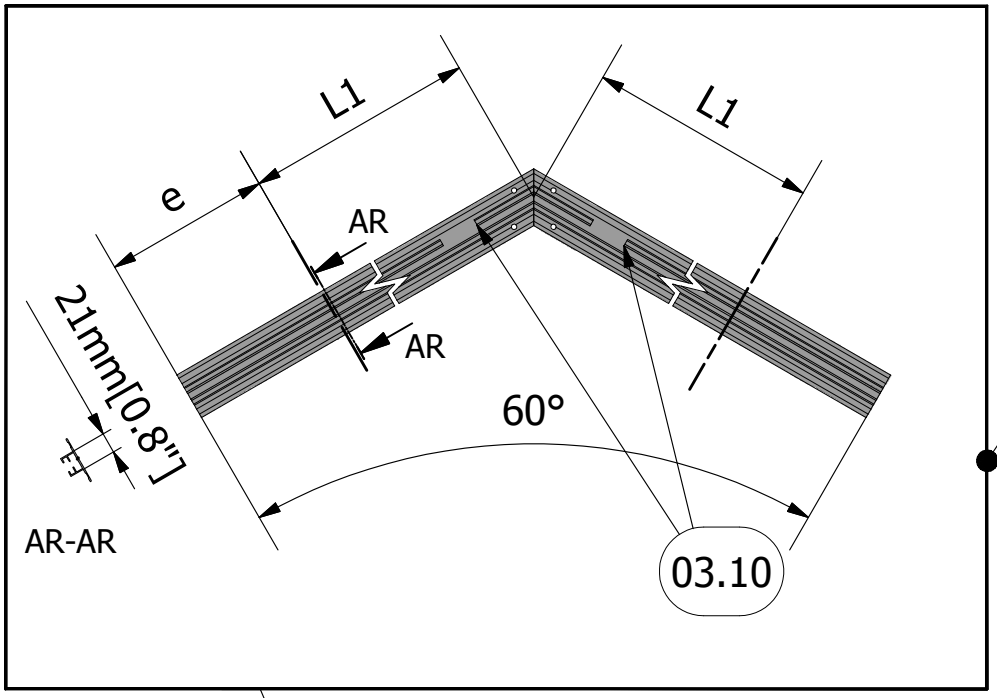

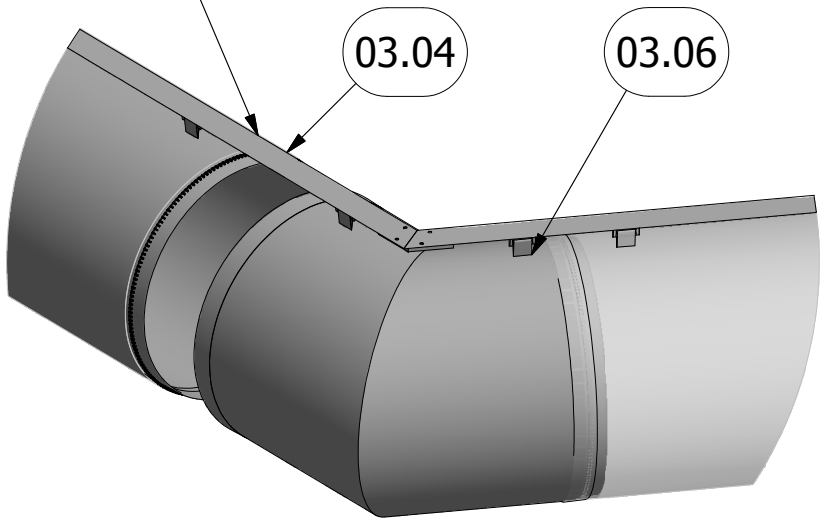

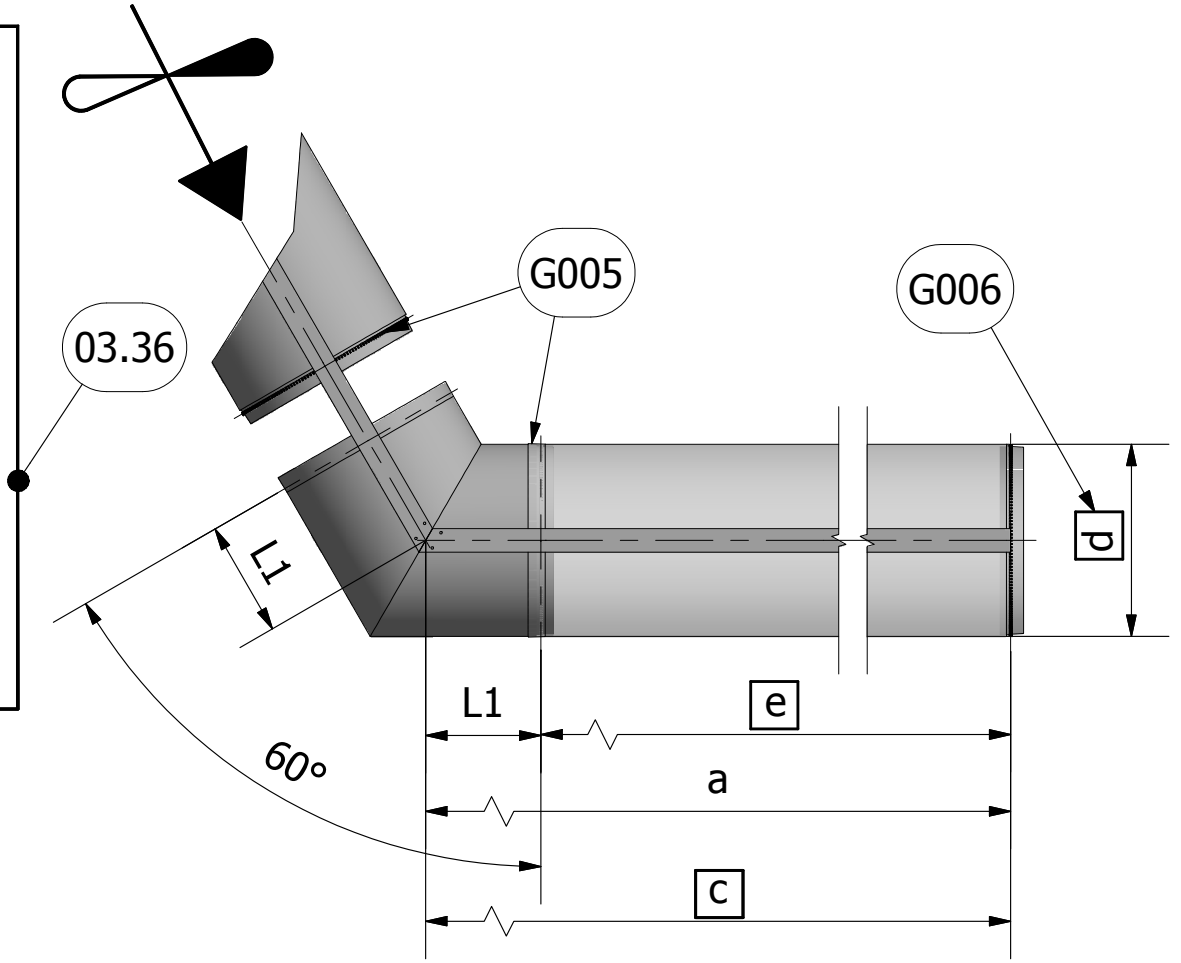

a = e + L1

a = c

L1⟶ 03.36

03.14

Type 3

FabricAir® Installation Drawing

2003-0314-000 (2014-FEB)

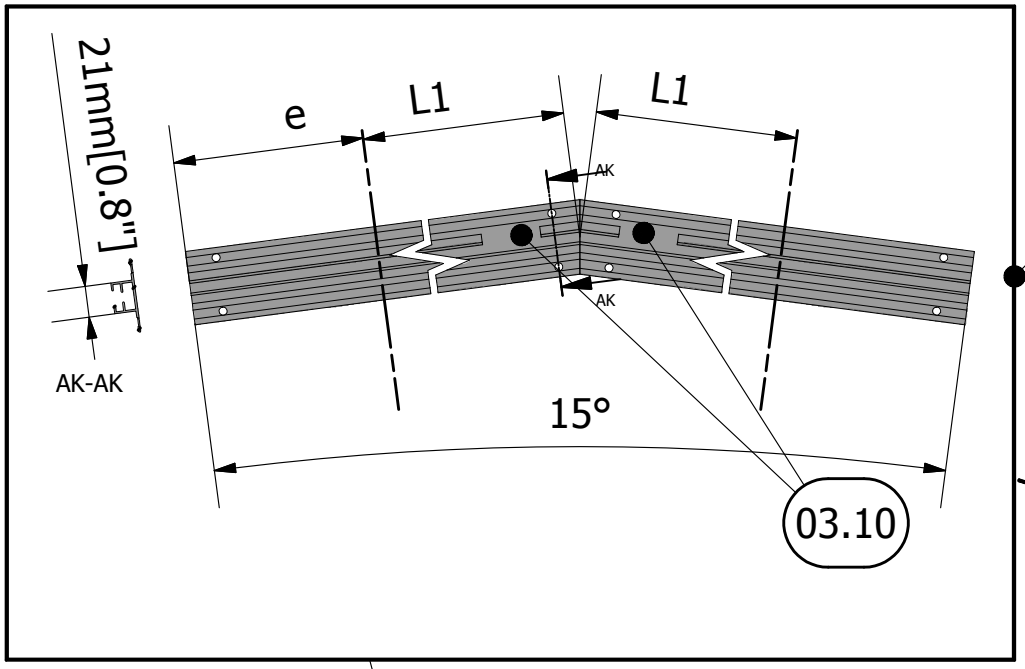

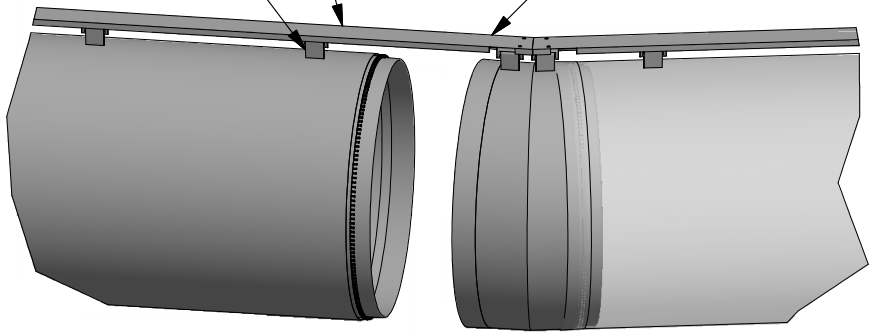

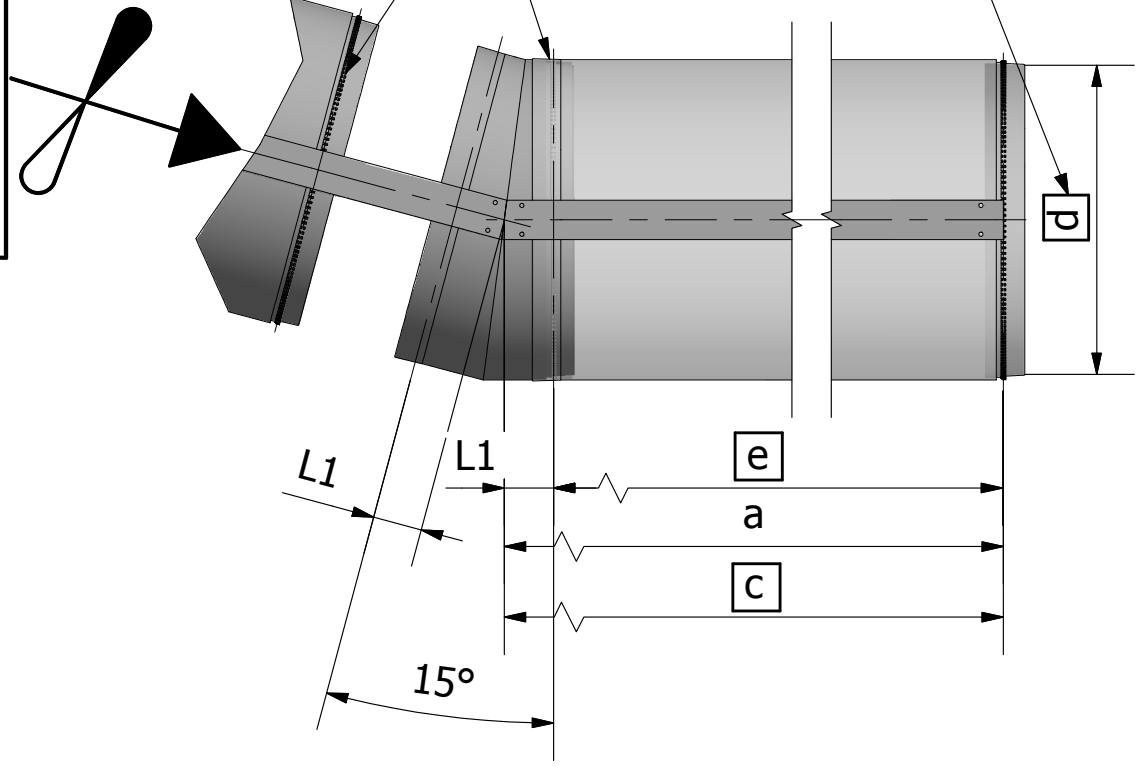

a = c

a = e + L1

L1⟶ 03.37

03.15

Type 3

FabricAir® Installation Drawing

2003-0315-000 (2014-FEB)

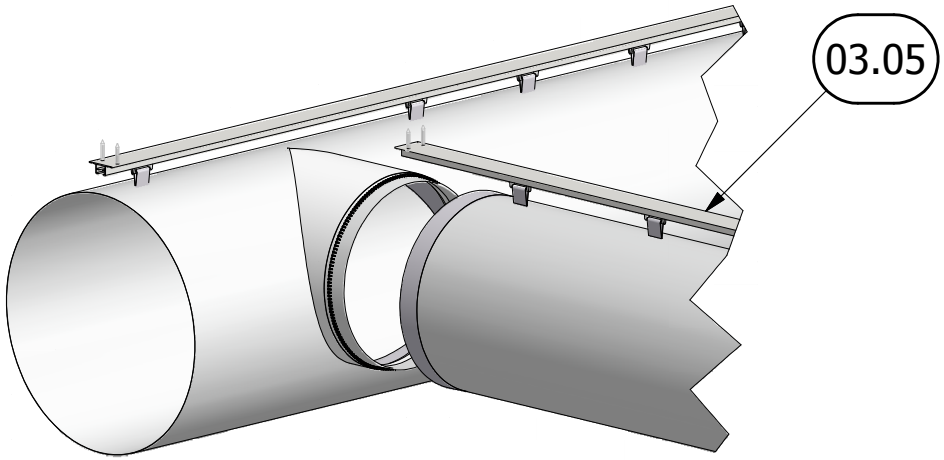

1

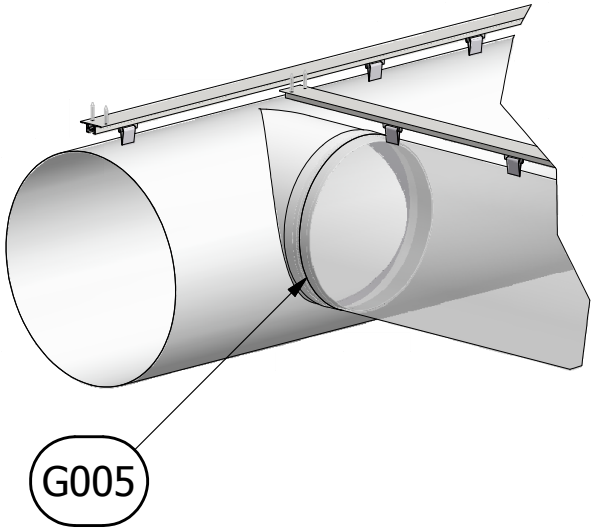

2

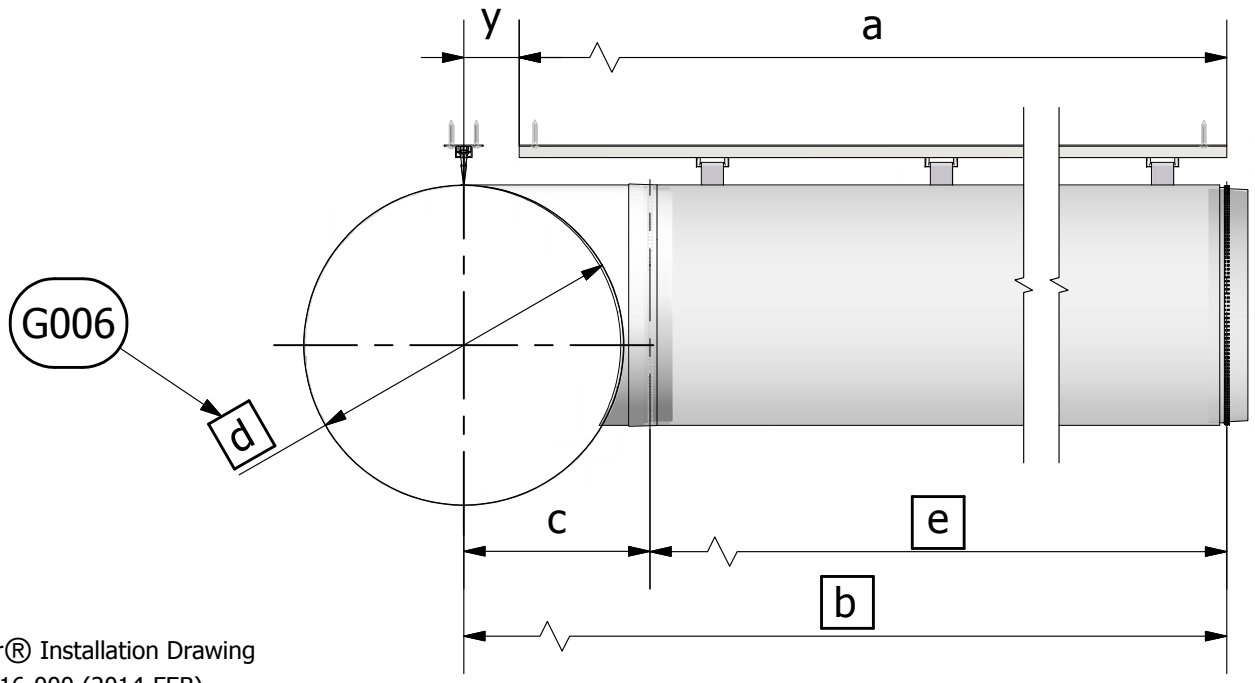

a = e + c - y

a = b - y

y = Max.65mm [2.56"]

c = ½ d + 35mm [1.38"]

03.16

Type 3

FabricAir® Installation Drawing

2003-0316-000 (2014-FEB)

1

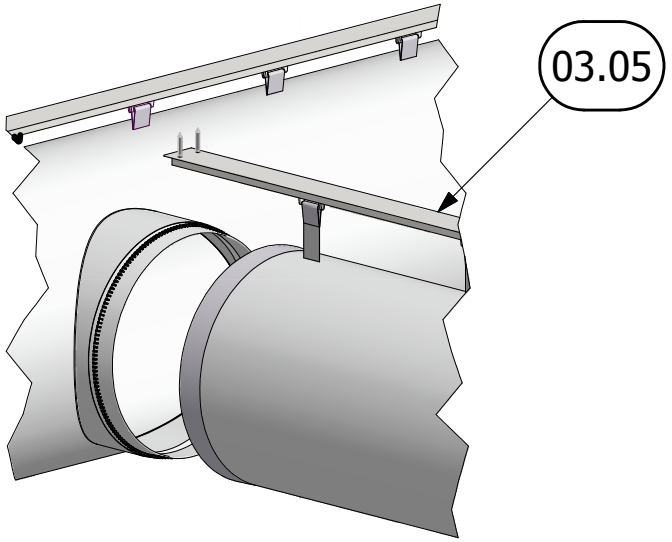

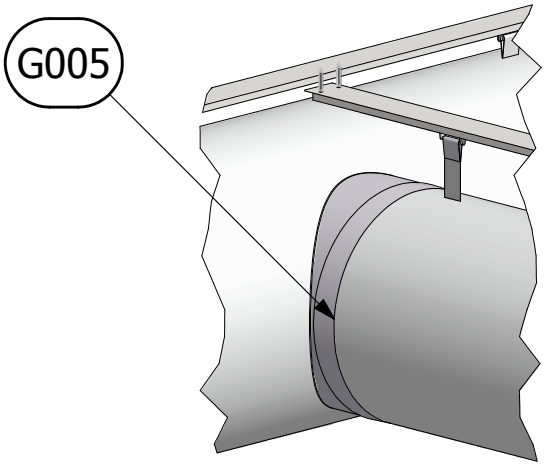

2

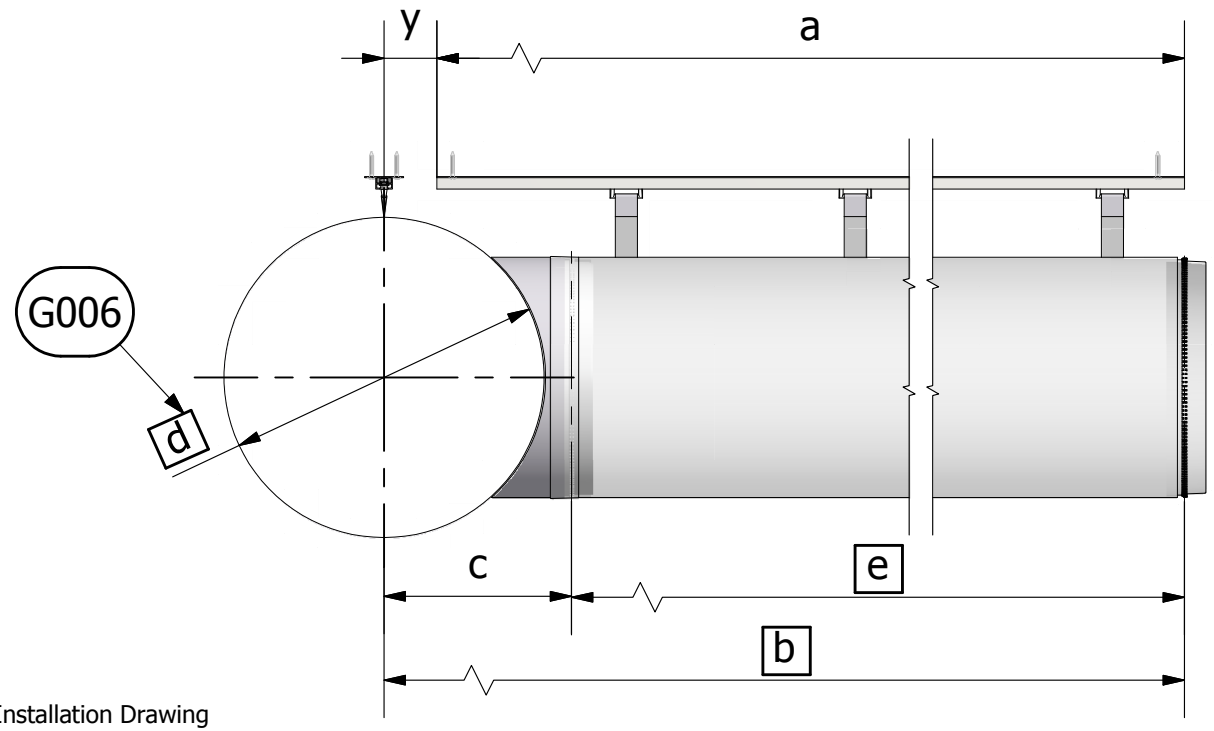

a = e + c - y

a = b - y

y = Max.65mm [2.56"]

c = ½ d + 35 mm[1.38"]

03.17

Type 3

FabricAir® Installation Drawing

2003-0317-000 (2014-FEB)

1

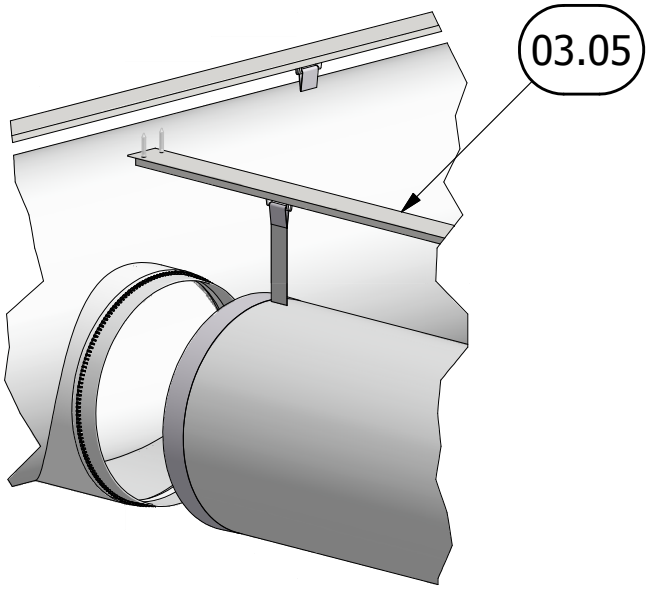

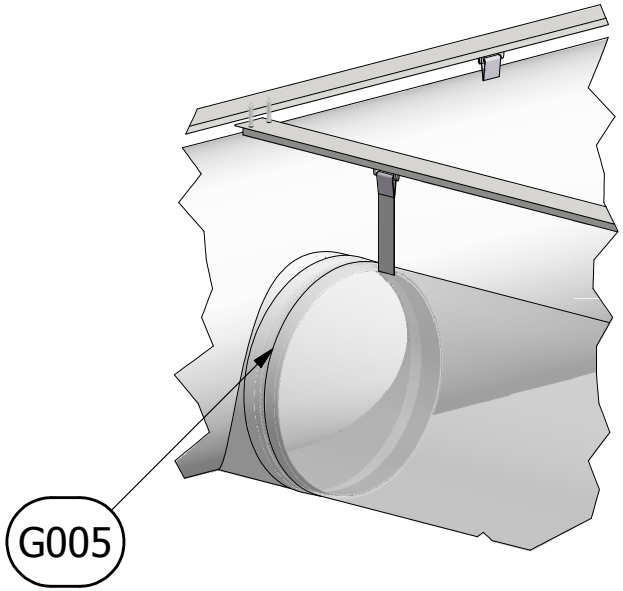

2

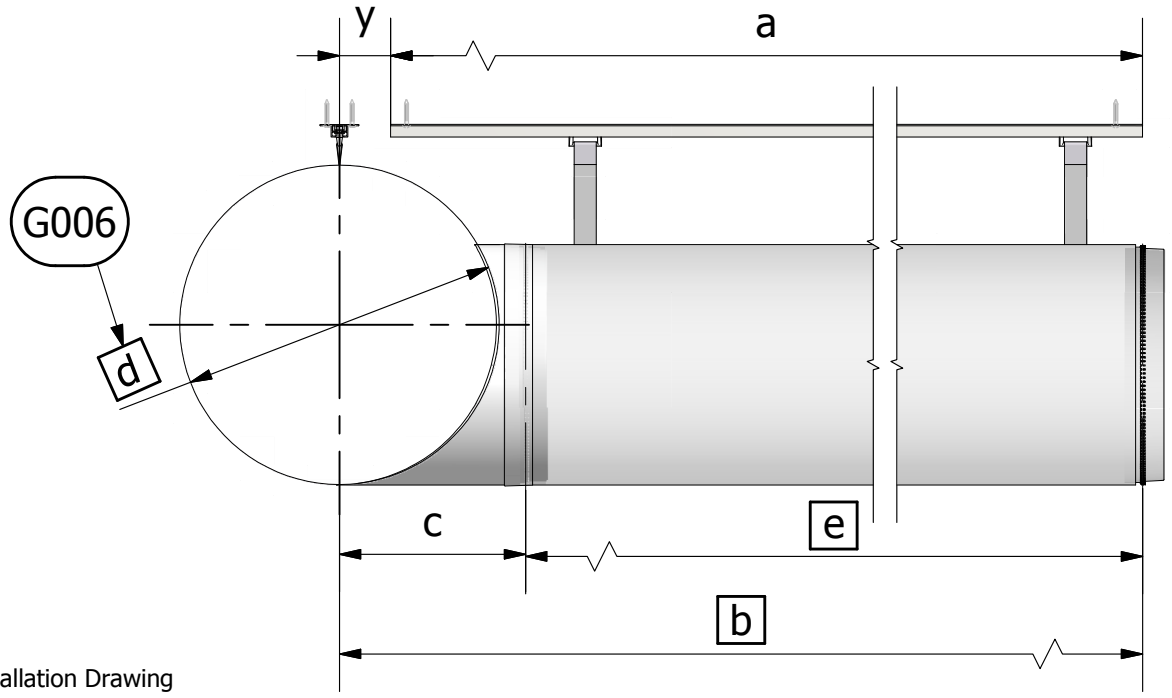

a = e + c - y

a = b - y

y = Max.65mm[2.56"]

c = ½ d + 35mm [1.38"]

03.18

Type 3

FabricAir® Installation Drawing

2003-0318-000 (2014-FEB)

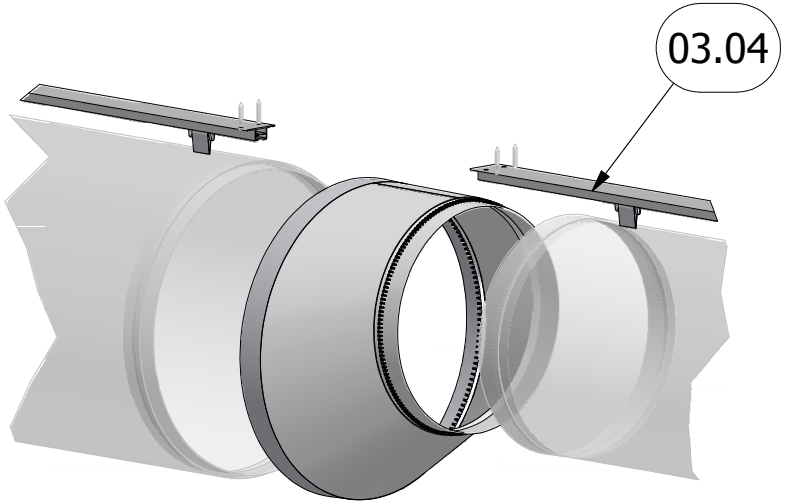

1

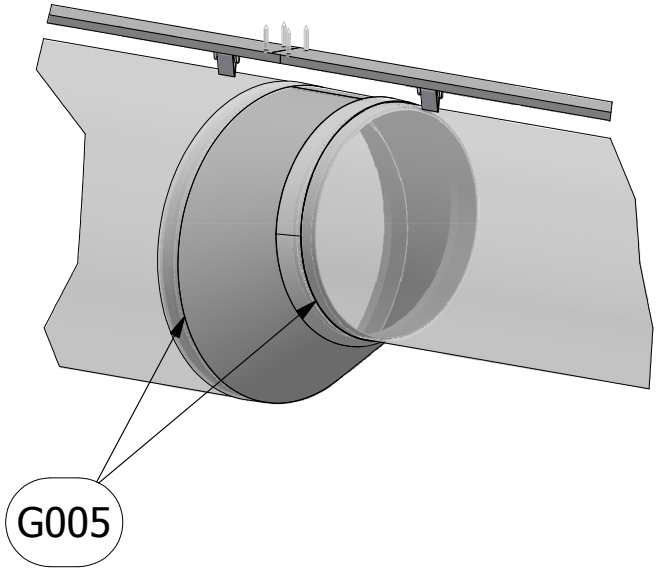

2

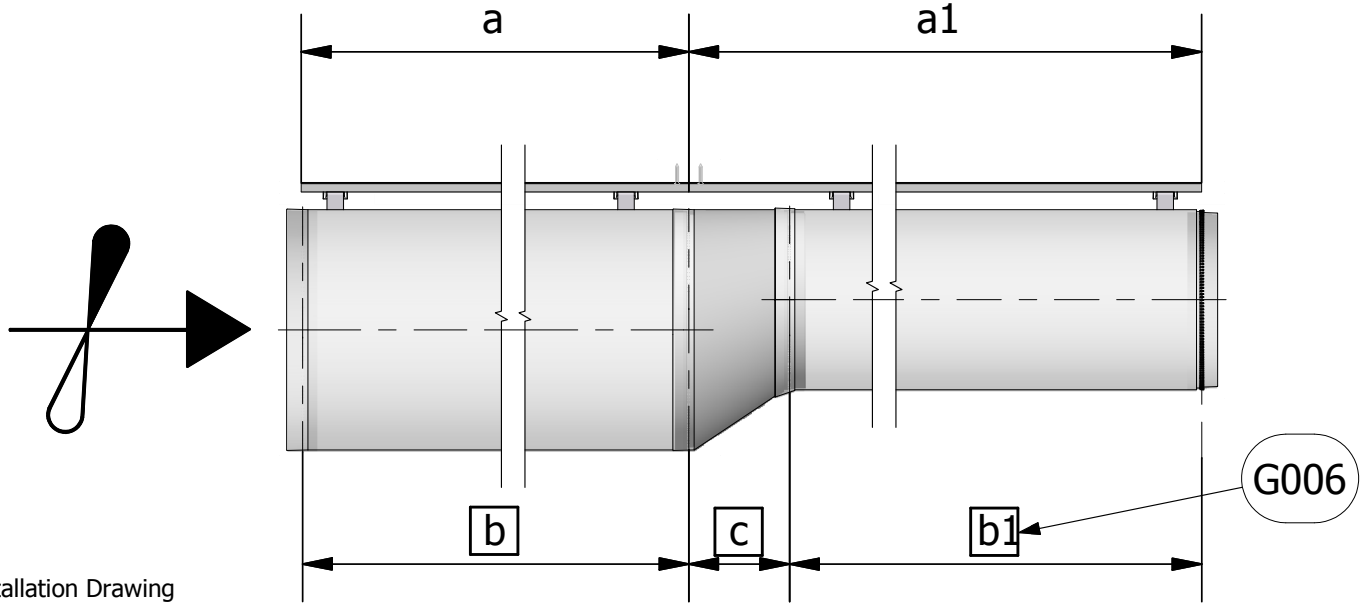

a = b

a1 = b1 + c

03.19

Type 3

FabricAir® Installation Drawing

2003-0319-000 (2014-FEB)

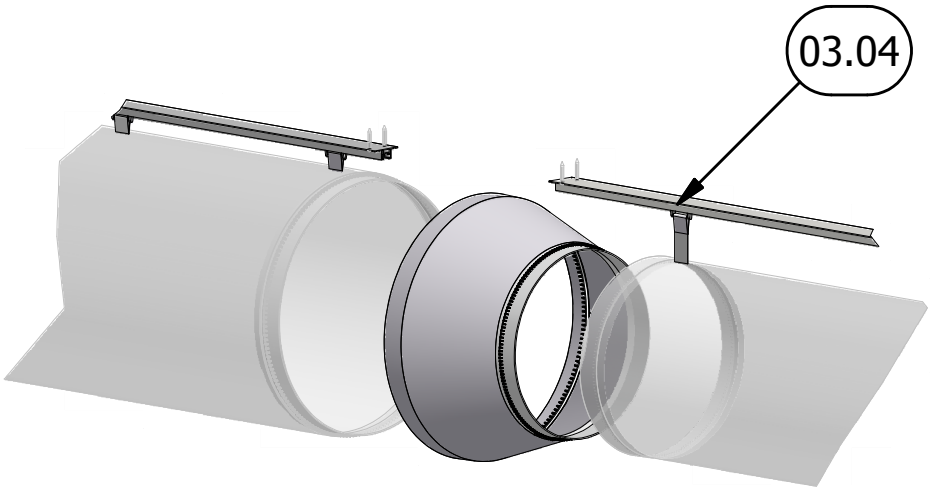

1

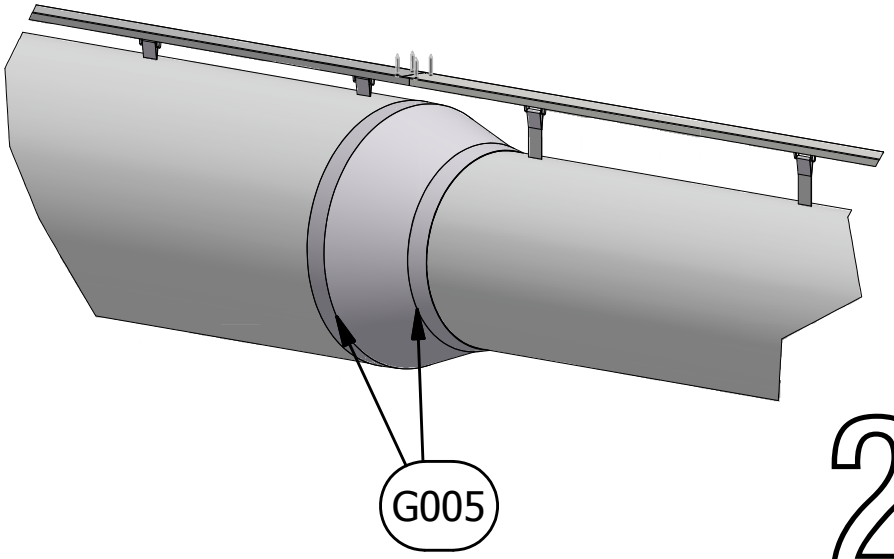

2

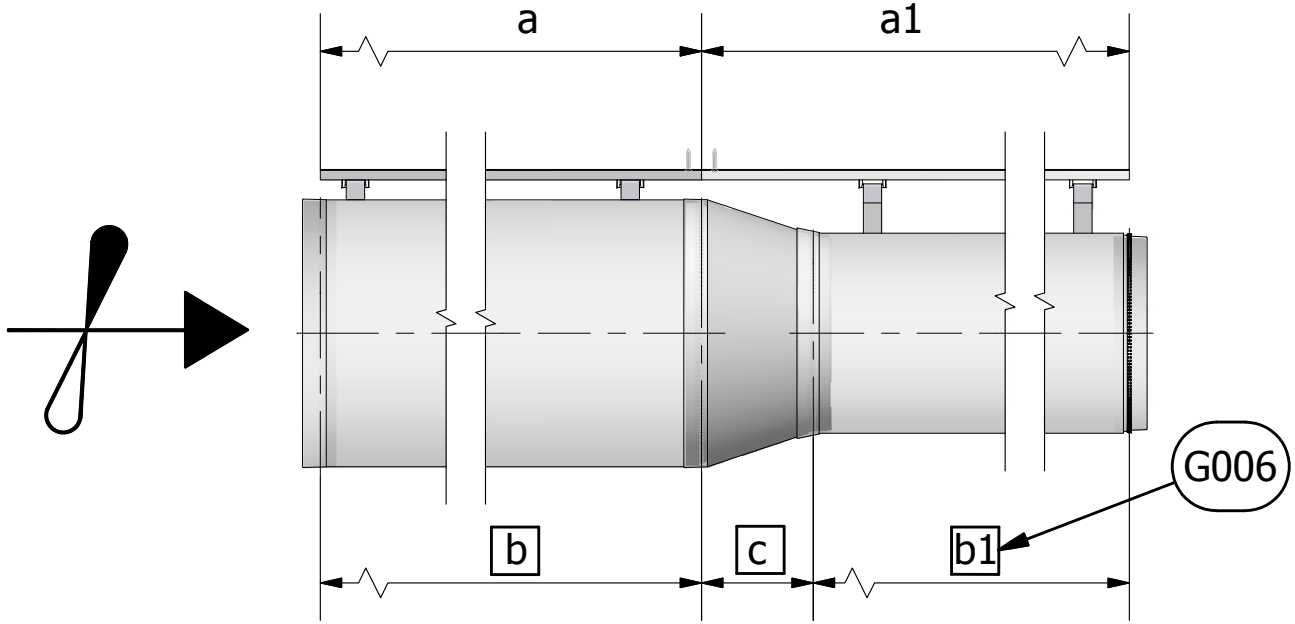

a = b

a1 = b1 + c

03.20

Type 3

FabricAir® Installation Drawing

2003-0320-000 (2014-FEB)

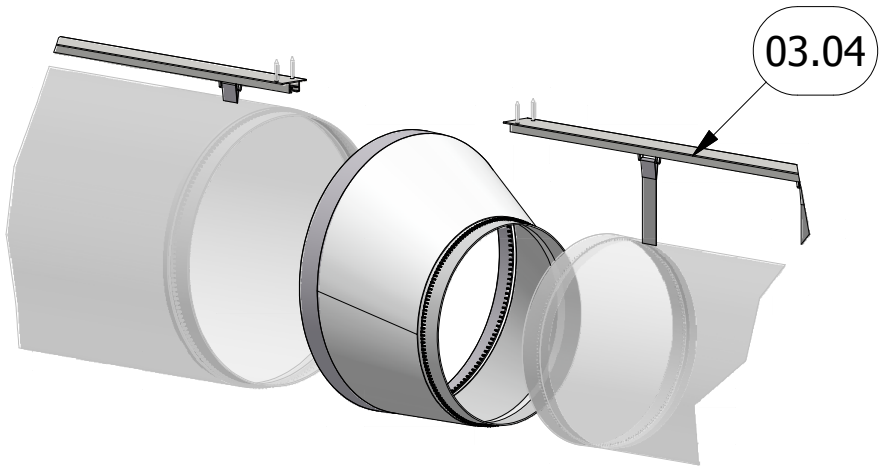

1

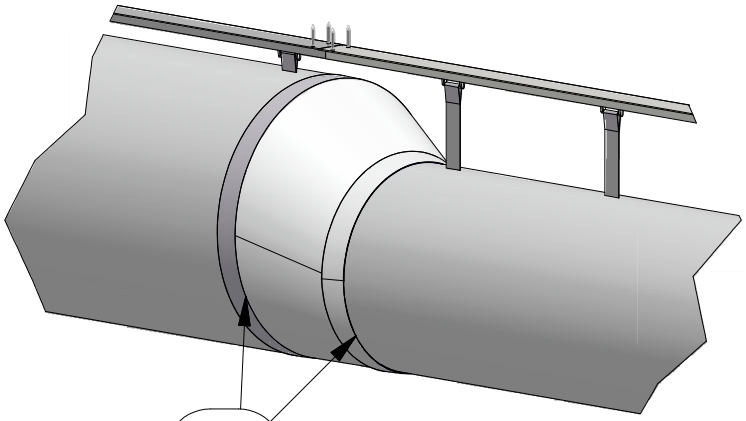

2

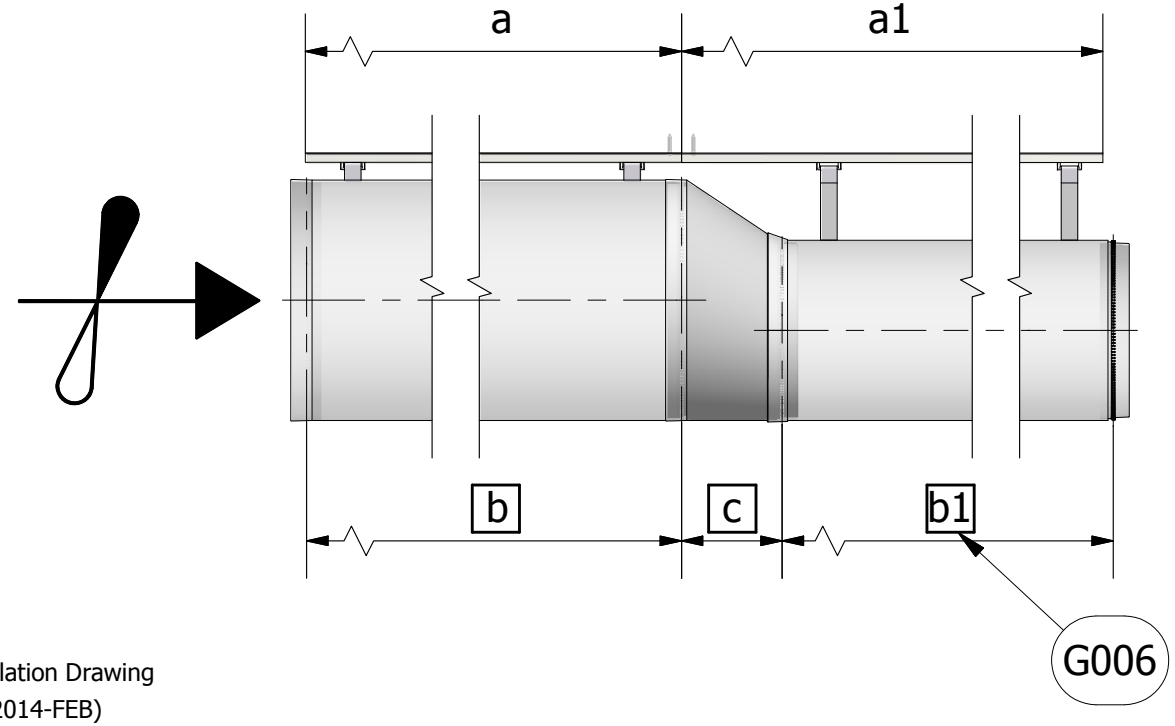

a = b

a1 = b1 + c

03.21

Type 3

FabricAir® Installation Drawing

2003-0321-000 (2014-FEB)

90°

d-DuctDiam.[inch]	d-DuctDiam.[mm]	L1	g
	100	36	54
	160	52	86
	200	63	107
8	205	64	110
	250	76	134
10	255	77	137
	300	89	161
12	305	91	163
	315	93	169
14	360	105	193
	400	116	214
16	410	119	220
	450	130	241
18	460	132	247
	500	143	268
20	510	146	273
22	560	159	300
	600	170	322
24	610	172	327
	630	178	388
26	660	186	354
	710	199	380
28	715	201	383
30	765	214	410
	800	223	429
32	815	227	437
34	865	241	464
	900	250	482
36	915	254	490
38	965	268	517
	1000	277	536
40	1020	282	547
42	1070	296	573
	1100	304	589
44	1120	309	600
46	1170	323	627
	1200	331	643
48	1220	336	654
	1250	344	670
50	1270	349	681
	1300	357	697
52	1320	363	707
	1400	384	750
56	1425	391	764
58	1480	406	793
	1500	411	804
60	1525	418	817
62	1580	432	847
	1600	438	857
64	1630	446	874
66	1680	459	900
	1700	465	911
68	1730	473	927
70	1780	486	954
	1800	491	965
72	1830	499	981
	1900	518	1018
76	1930	526	1034
	2000	545	1072
80	2035	554	1091

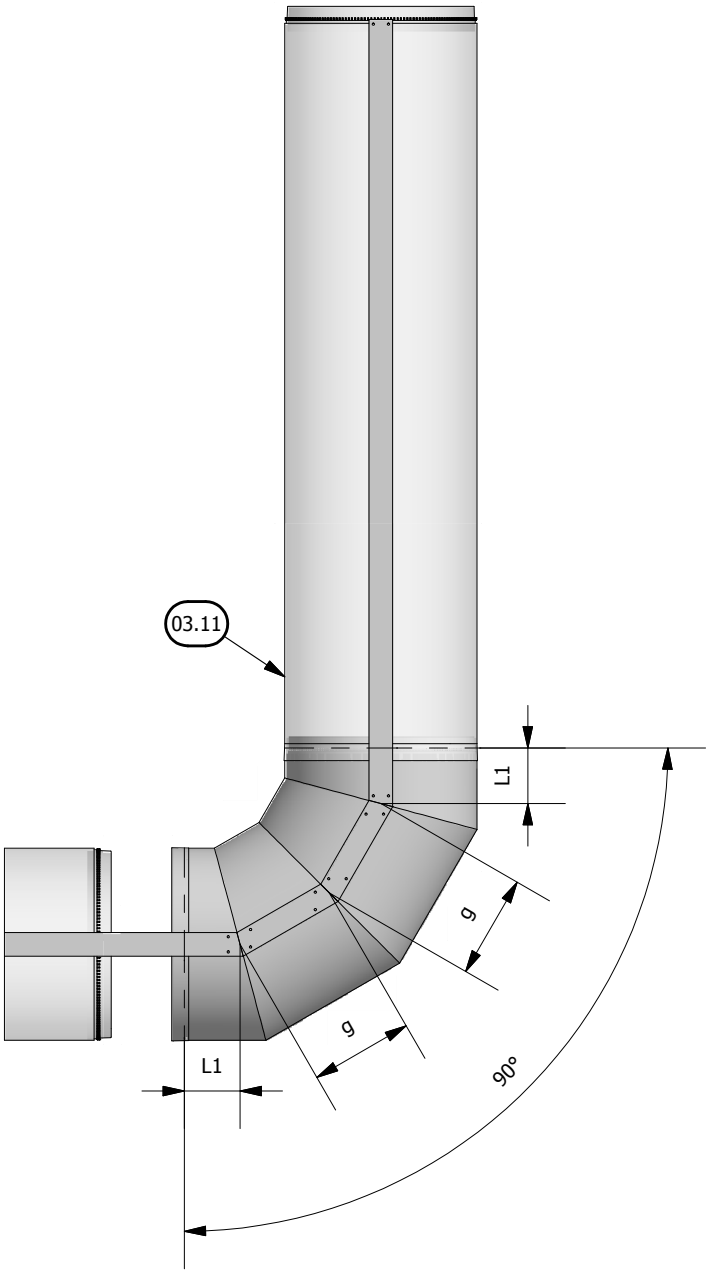

45°

d-DuctDiam.[inch]	d-DuctDiam.[mm]	L1
	100	50
	160	75
	200	92
8	205	94
	250	113
10	255	115
	300	133
12	305	135
	315	139
14	360	158
	400	175
16	410	179
	450	195
18	460	200
	500	216
20	510	220
22	560	241
	600	258
24	610	262
	630	270
26	660	282
	710	303
28	715	305
30	765	326
	800	340
32	815	347
34	865	367
	900	382
36	915	388
38	965	409
	1000	423
40	1020	431
42	1070	452
	1100	465
44	1120	473
46	1170	494
	1200	506
48	1220	514
	1250	527
50	1270	535
	1300	547
52	1320	556
	1400	589
56	1425	599
58	1480	622
	1500	630
60	1525	641
62	1580	663
	1600	672
64	1630	684
66	1680	705
	1700	713
68	1730	726
70	1780	746
	1800	755
72	1830	767
	1900	796
76	1930	808
	2000	837
80	2035	852

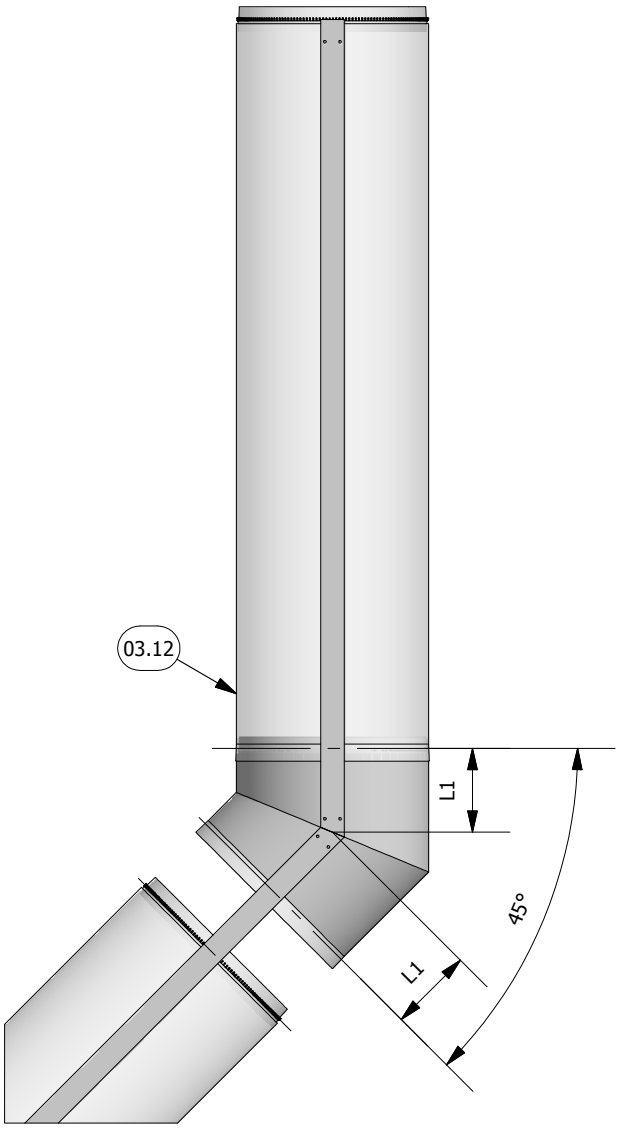

30°

d-DuctDiam.[inch]	d-DuctDiam.[mm]	L1
	100	36
	160	52
	200	63
8	205	64
	250	76
10	255	77
	300	89
12	305	91
	315	93
14	360	105
	400	116
16	410	119
	450	130
18	460	132
	500	143
20	510	146
22	560	159
	600	170
24	610	172
	630	178
26	660	186
	710	199
28	715	201
30	765	214
	800	223
32	815	227
34	865	241
	900	250
36	915	254
38	965	268
	1000	277
40	1020	282
42	1070	296
	1100	304
44	1120	309
46	1170	323
	1200	331
48	1220	336
	1250	344
50	1270	349
	1300	357
52	1320	363
	1400	384
56	1425	391
58	1480	406
	1500	411
60	1525	418
62	1580	432
	1600	438
64	1630	446
66	1680	459
	1700	465
68	1730	473
70	1780	486
	1800	491
72	1830	499
	1900	518
76	1930	526
	2000	545
80	2035	554

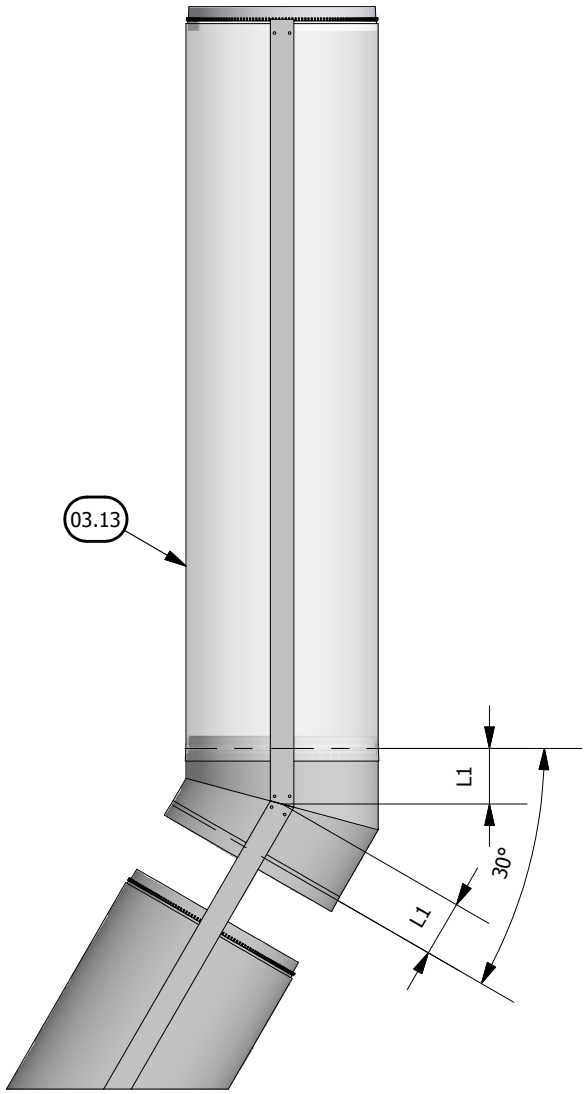

60°

d-DuctDiam.[inch]	d-DuctDiam.[mm]	L1
	100	67
	160	101
	200	124
8	205	127
	250	153
10	255	156
	300	182
12	305	185
	315	191
14	360	217
	400	240
16	410	246
	450	269
18	460	275
	500	298
20	510	303
22	560	332
	600	355
24	610	361
	630	373
26	660	390
	710	419
28	715	422
30	765	451
	800	471
32	815	480
34	865	508
	900	529
36	915	537
38	965	566
	1000	586
40	1020	598
42	1070	627
	1100	644
44	1120	656
46	1170	684
	1200	702
48	1220	713
	1250	731
50	1270	742
	1300	760
52	1320	771
	1400	817
56	1425	832
58	1480	863
	1500	875
60	1525	889
62	1580	921
	1600	932
64	1630	950
66	1680	978
	1700	990
68	1730	1007
70	1780	1036
	1800	1048
72	1830	1065
	1900	1105
76	1930	1123
	2000	1163
80	2035	1183

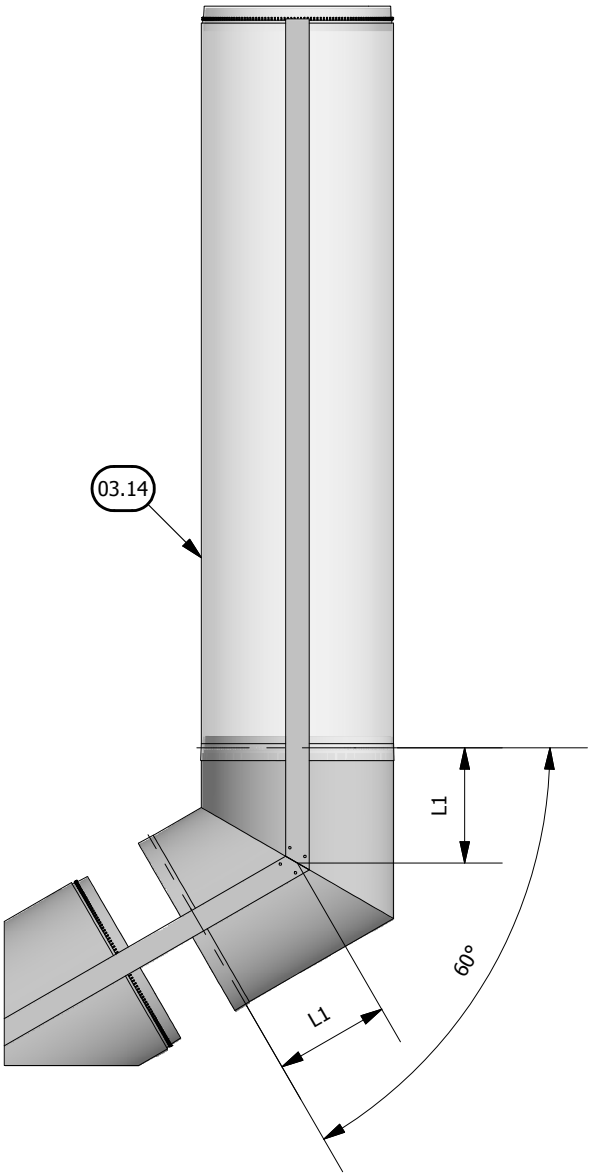

15°

d-DuctDiam.[inch]	d-DuctDiam.[mm]	L1
	100	22
	160	30
	200	35
8	205	36
	250	42
10	255	43
	300	48
12	305	49
	315	50
14	360	56
	400	62
16	410	63
	450	68
18	460	70
	500	75
20	510	76
22	560	83
	600	88
24	610	89
	630	92
26	660	96
	710	102
28	715	103
30	765	110
	800	114
32	815	116
34	865	123
	900	127
36	915	129
38	965	136
	1000	141
40	1020	143
42	1070	150
	1100	154
44	1120	156
46	1170	163
	1200	167
48	1220	170
	1250	174
50	1270	176
	1300	180
52	1320	183
	1400	193
56	1425	197
58	1480	204
	1500	206
60	1525	210
62	1580	217
	1600	220
64	1630	224
66	1680	230
	1700	233
68	1730	237
70	1780	243
	1800	246
72	1830	250
	1900	259
76	1930	263
	2000	272
80	2035	277

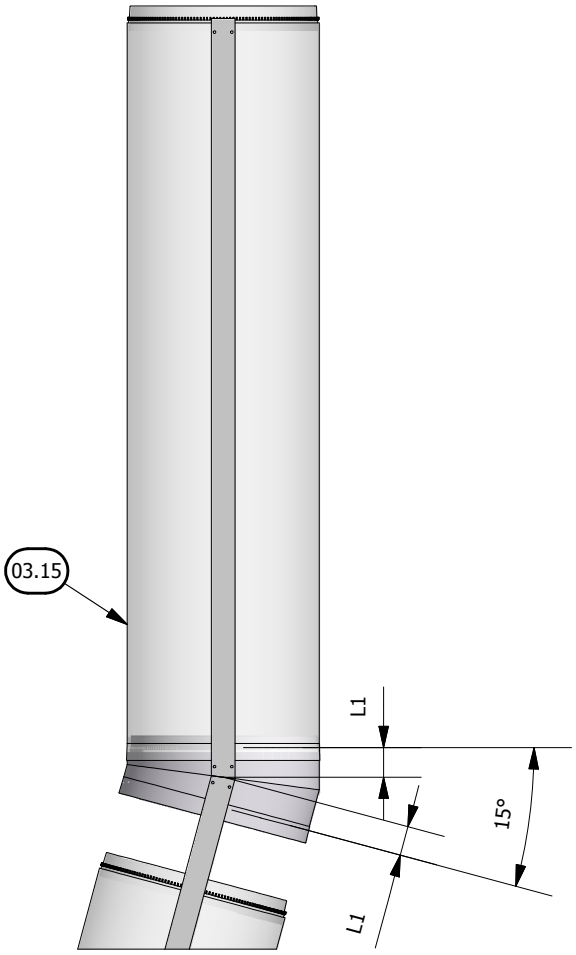

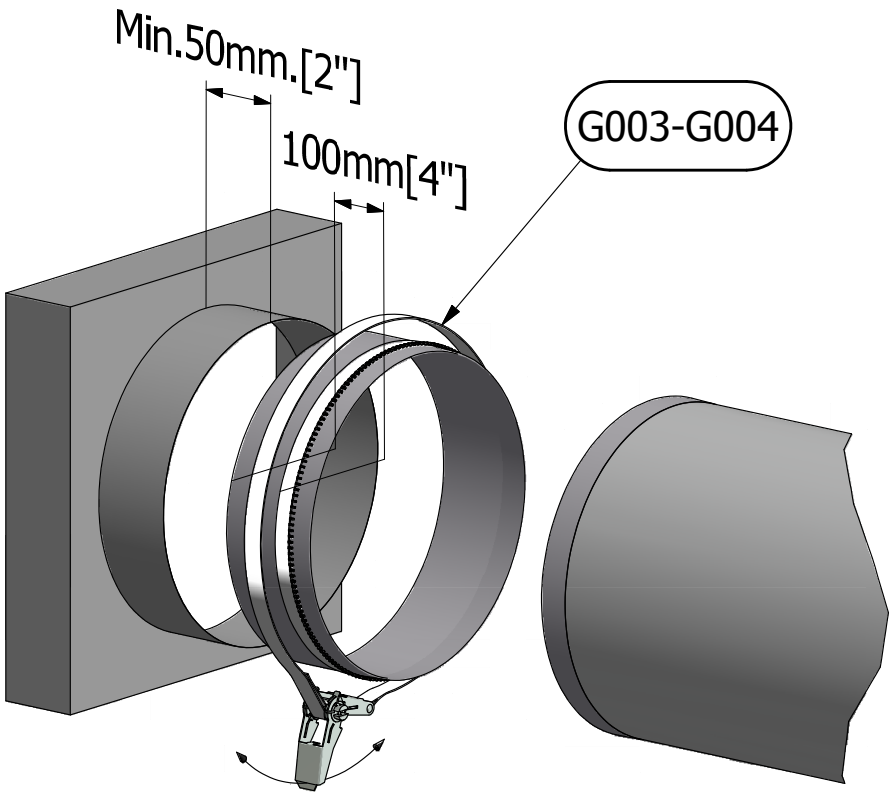

1

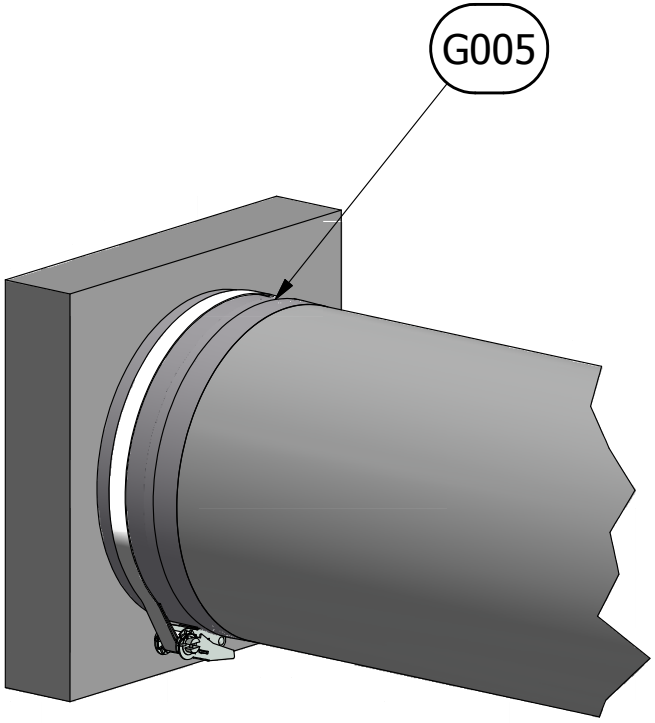

2

G001

FabricAir® Installation Drawing

2003-G001-000 (2014-FEB)

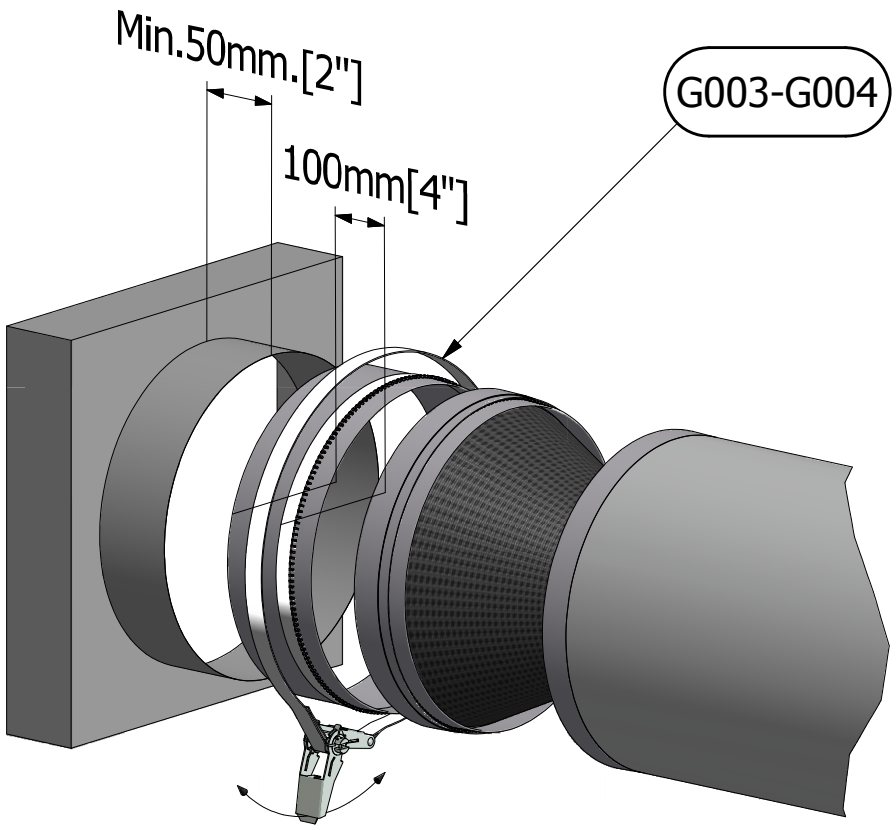

1

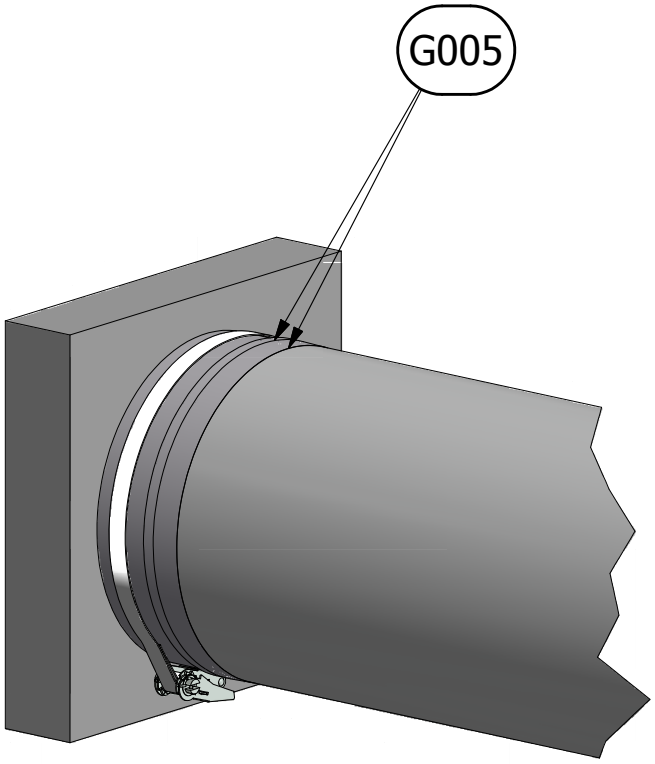

2

G002

FabricAir® Installation Drawing
2003-G002-000 (2014-FEB)

No. 17 (d < 508mm [20in])

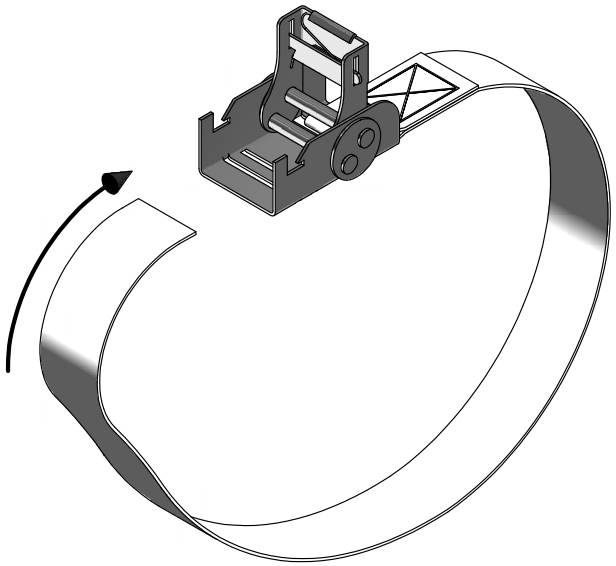

1

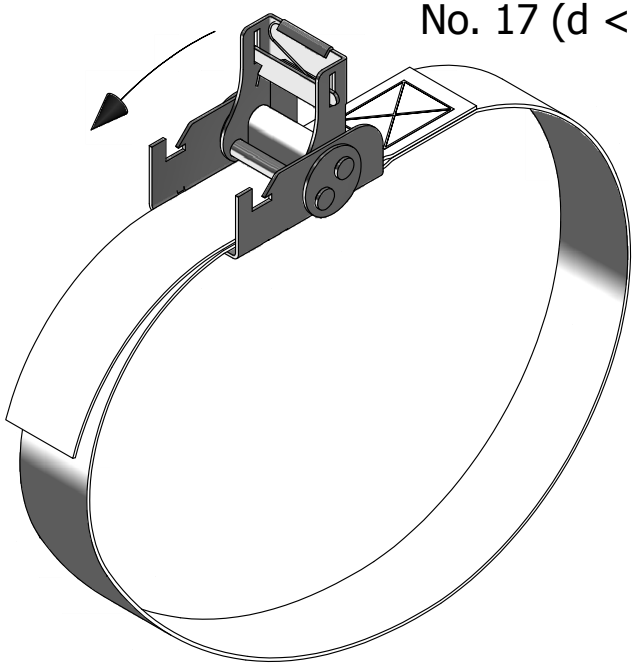

3

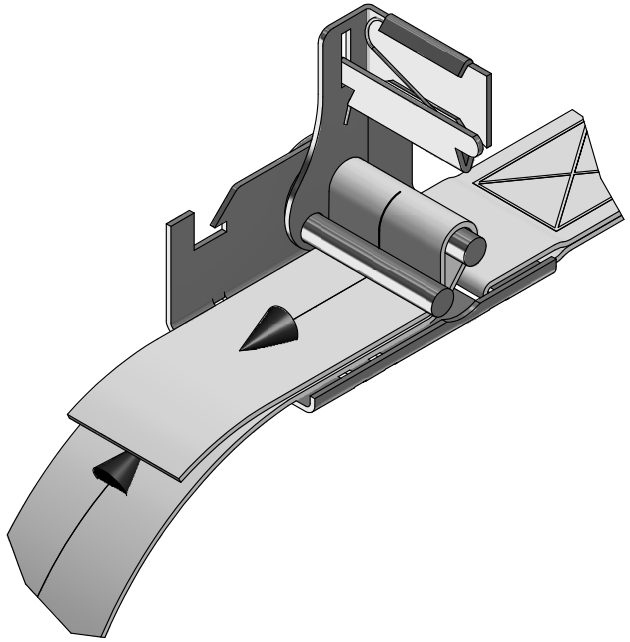

2

4

G003

FabricAir® Installation Drawing
2003-G003-000 (2014-FEB)

No. 18 (508mm [20"] < d < 2032mm[80"])

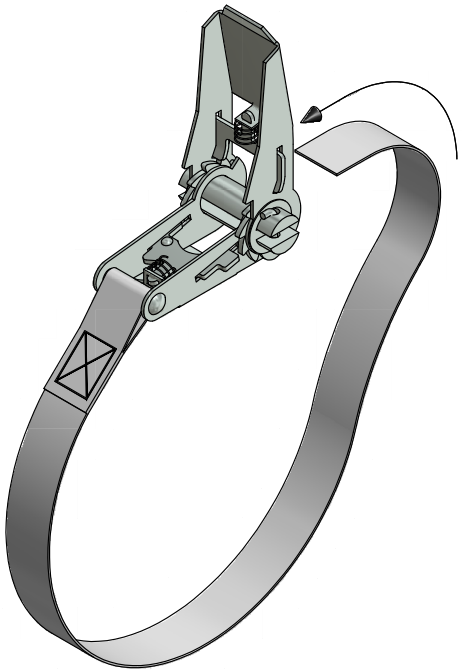

1

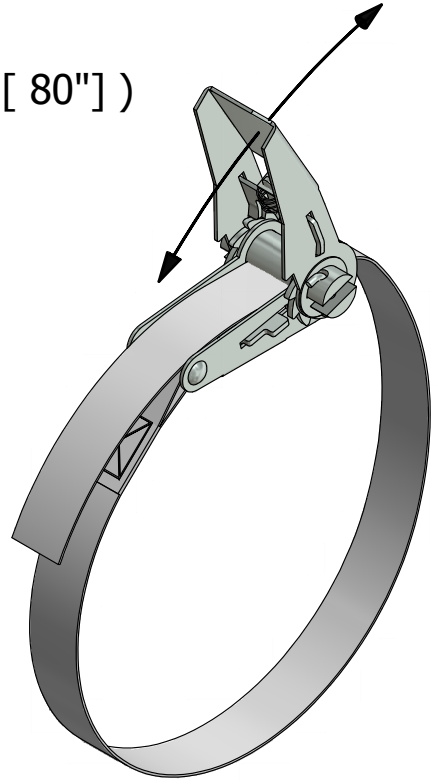

3

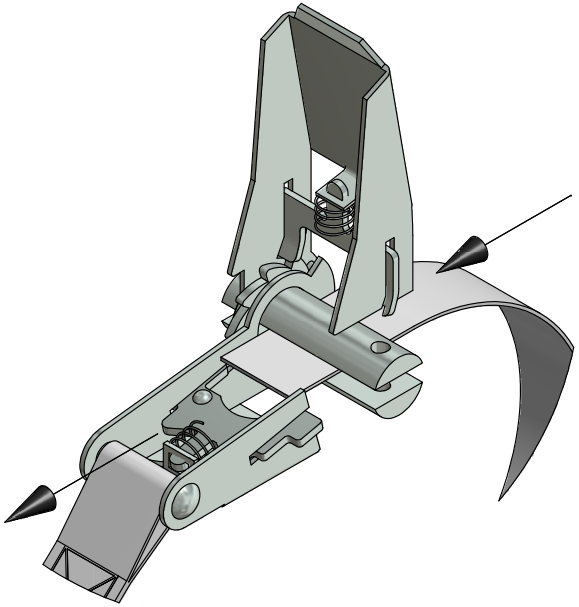

2

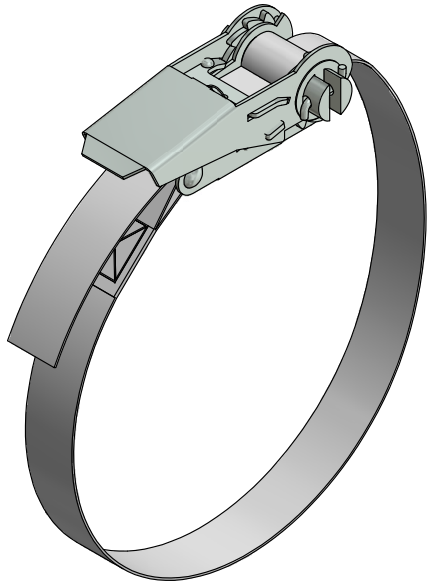

4

G004

FabricAir® Installation Drawing
2003-G004-000 (2014-FEB)

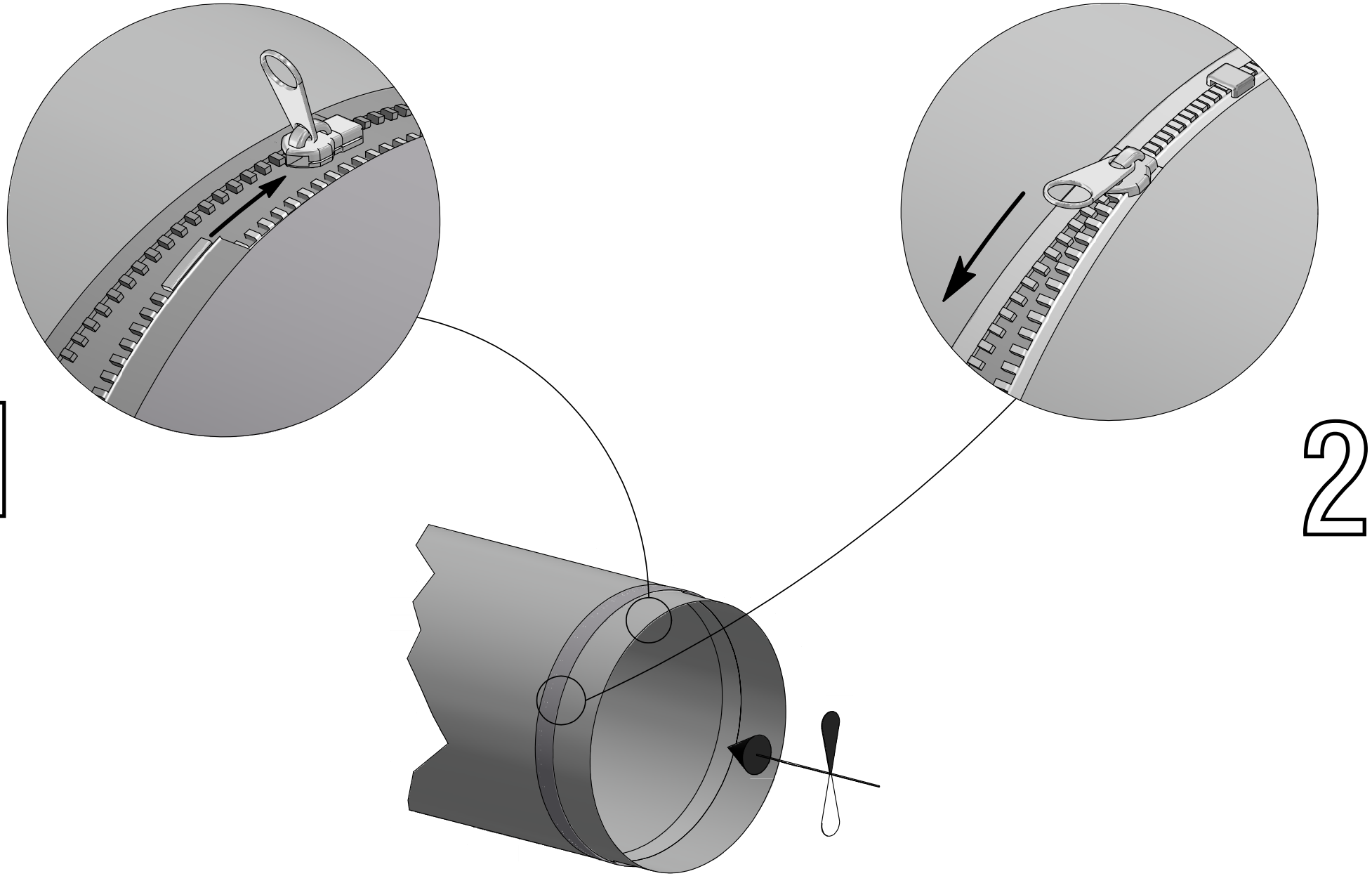

G005

FabricAir® Installation Drawing
2003-G005-000 (2014-FEB)

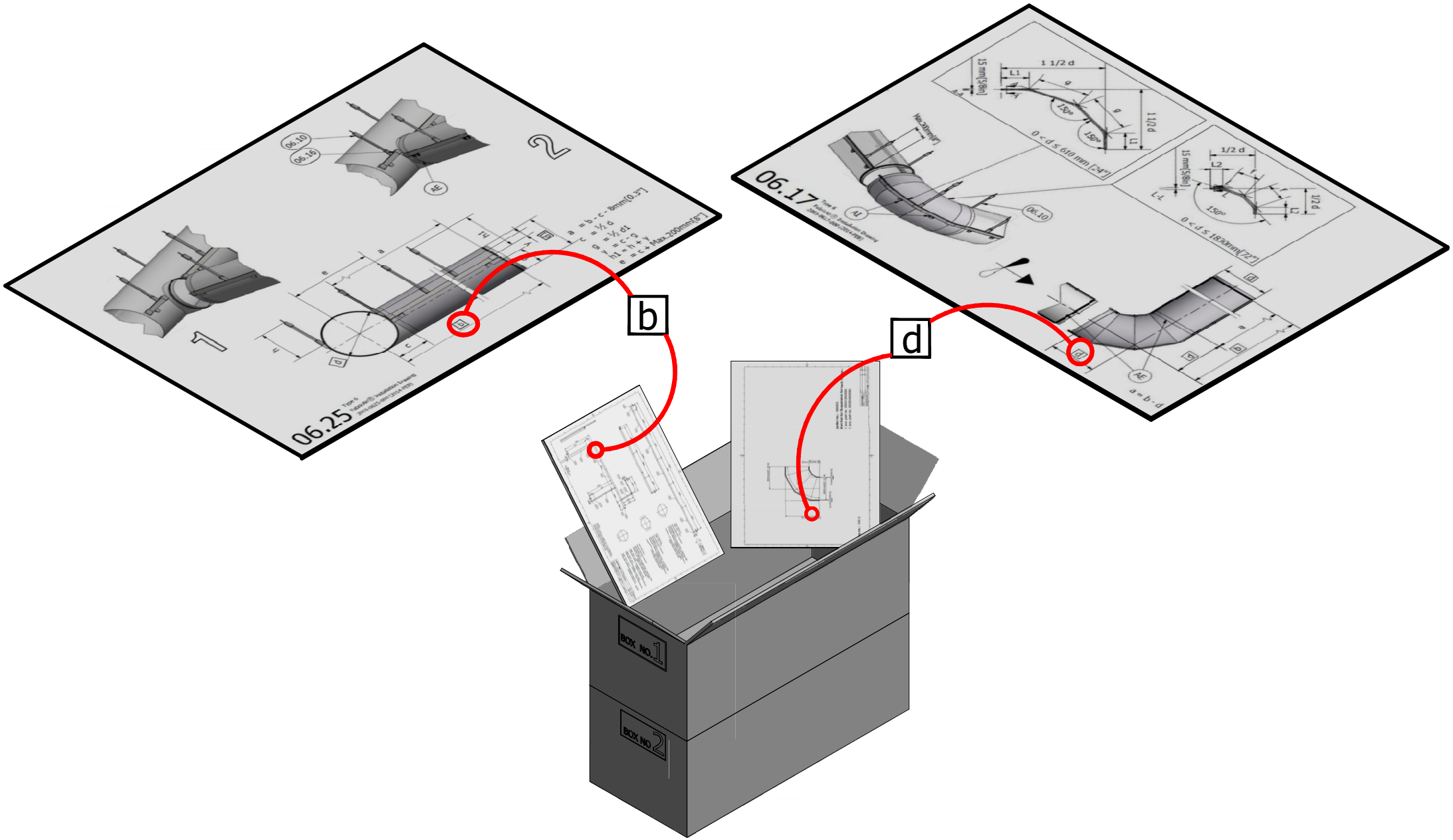

G006

FabricAir® Installation Drawing
2003-G006-000 (2014-FEB)

Note:
The Dimensions given in squares can be found in system drawing which is in box 1 .

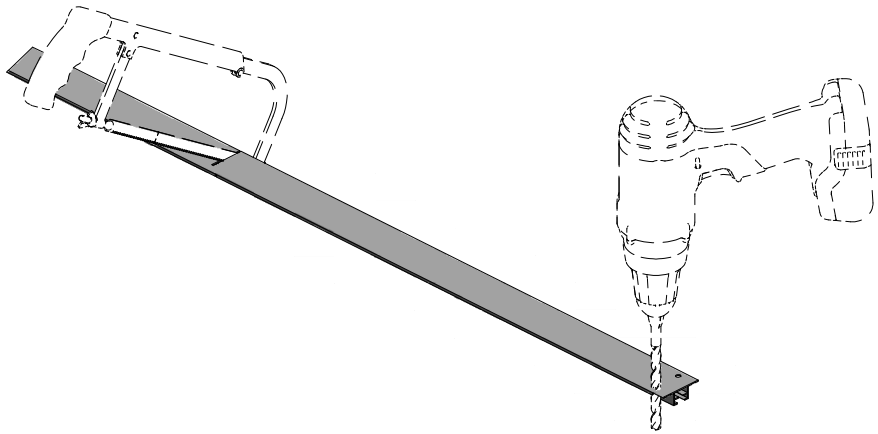

1

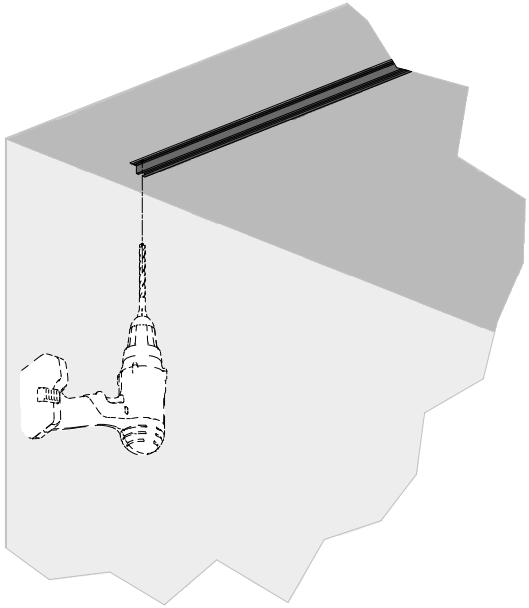

2

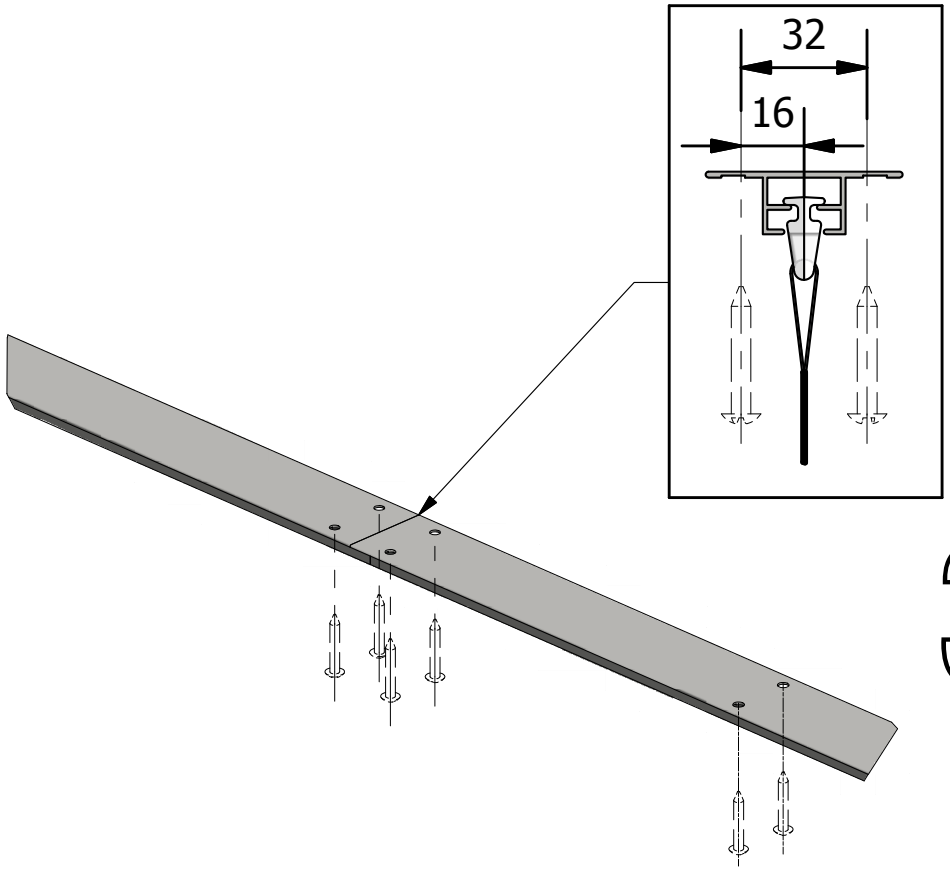

3

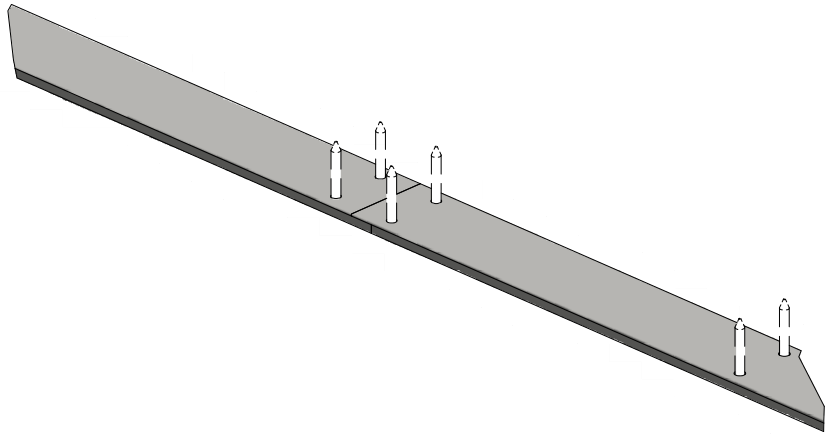

4

G018

FabricAir® Installation Drawing

2003-G018-000 (2014-FEB)

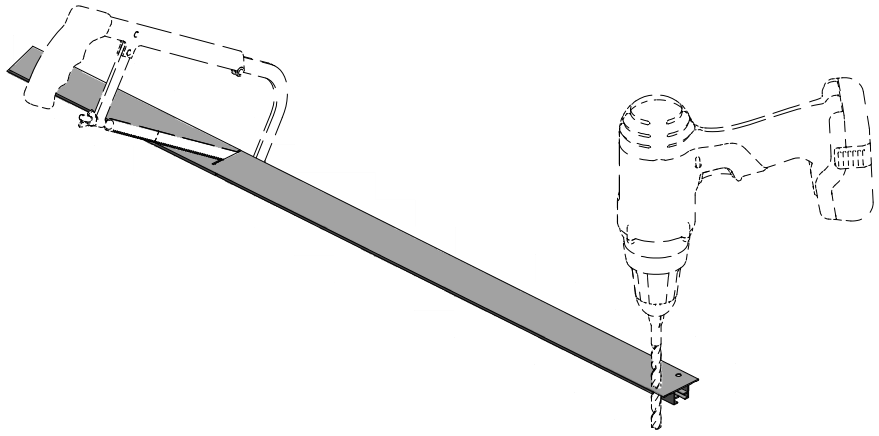

1

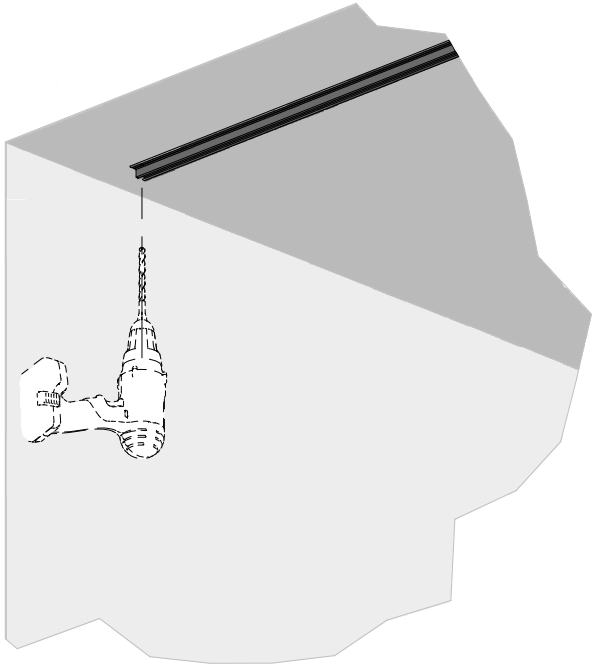

2

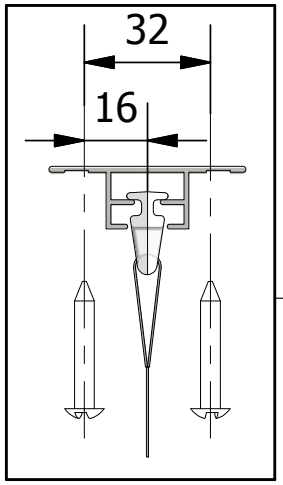

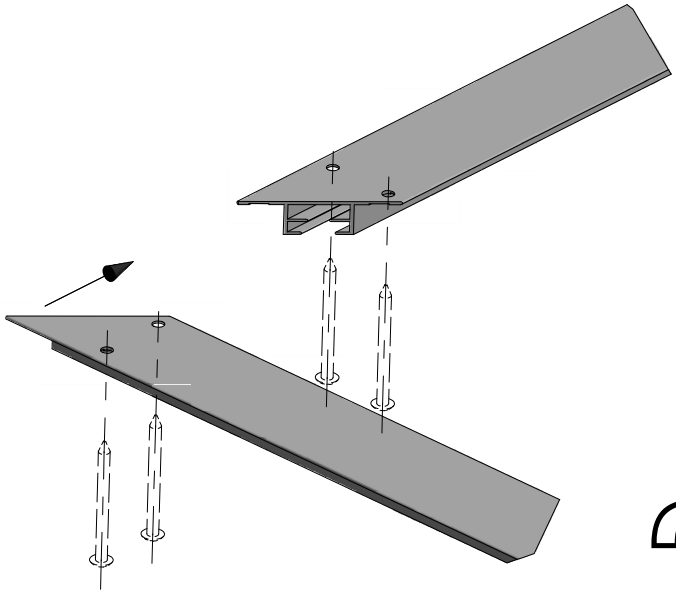

3

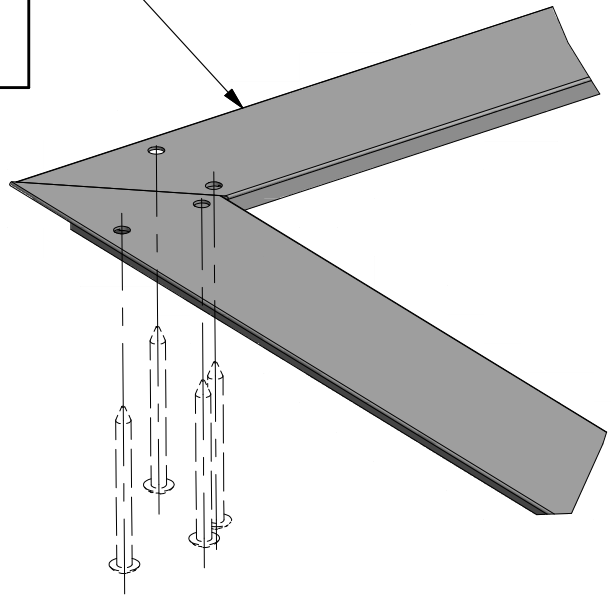

4

G019

FabricAir® Installation Drawing
2003-G019-000 (2014-FEB)

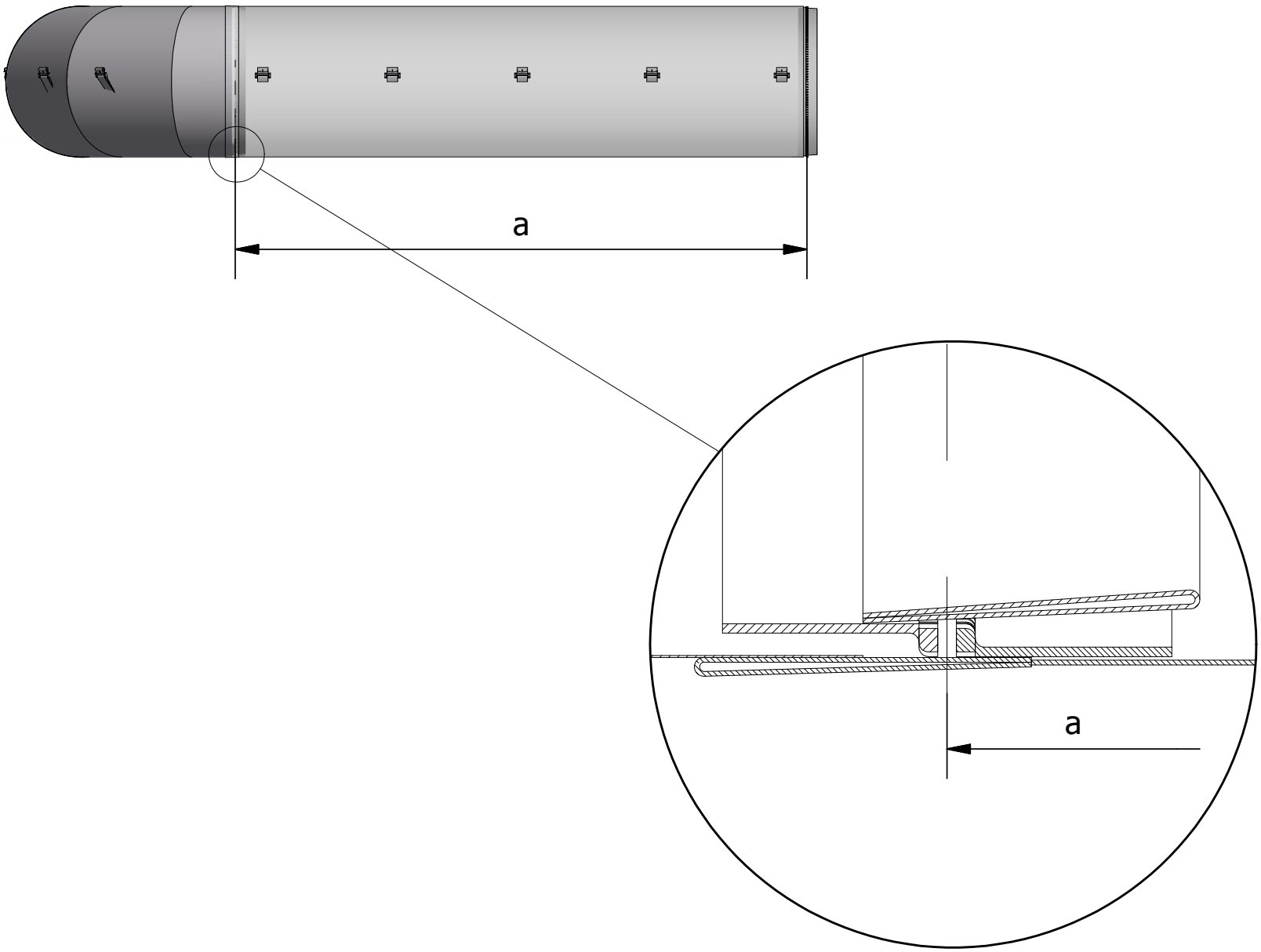

G025

FabricAir® Installation Drawing

2003-G025-000 (2014-FEB)

ASSEMBLY

1

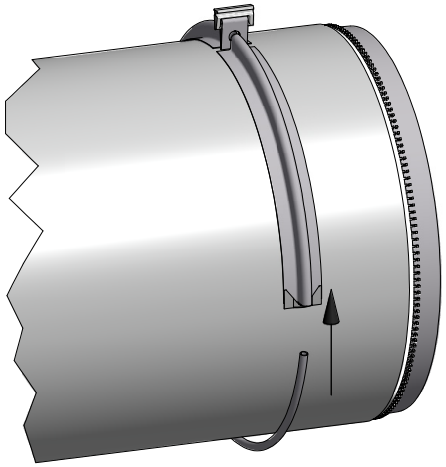

2

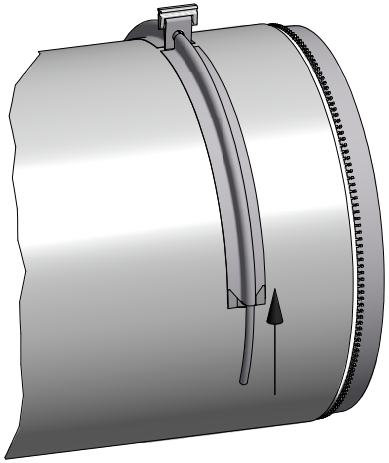

3

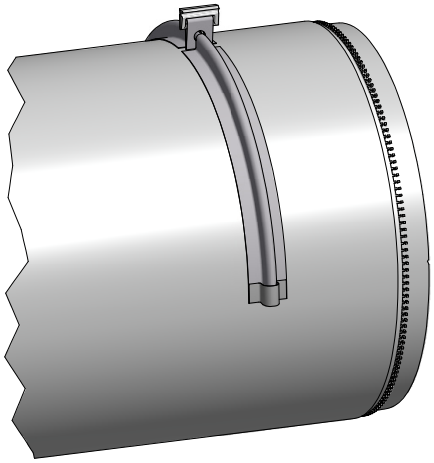

DISASSEMBLY

1

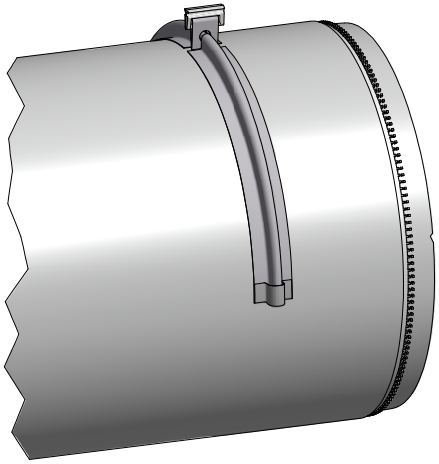

2

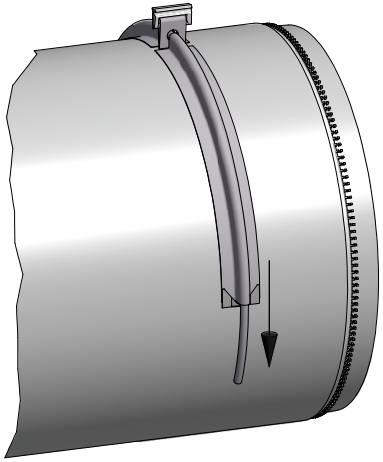

3

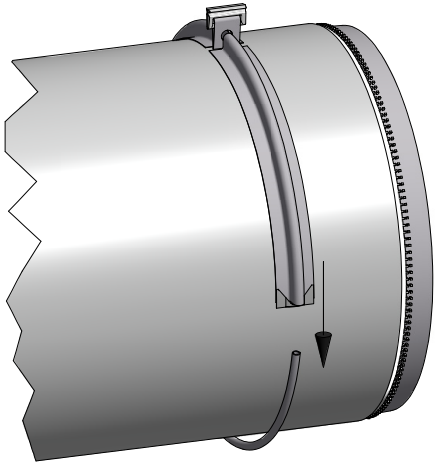

G027 FabricAir® Installation Drawing
2003-G027-000 (2014-FEB)

FabricAir Dispersion Systems
www.fabricair.com

ORDER NO : 1473677

CONTENTS OF BOX NO. 1/2:

INSTRUCTION BAG	1 pcs.
-Drawing Included	1 pcs.

Distribution Ducts

Tag no. 100.1 Inlet Ø 1060 x 100	2 pcs.
Tag no. 100.2 Inlet Ø 1060 x 2625	2 pcs.
Tag no. 100.5 Inlet Ø 500 x 1000 x 9330	2 pcs.

Suspensions

(05) STRETCHER M6 x 90,GV	12 pcs
(14) CABLE LOCK 5MM,GV	52 pcs
(18) FIXING	2 pcs

STRAP , Y/2 , Ø 1100 / 43.3 "W

Box weight : 31 kg

Box size : 780x380x500mm

Label 1/1