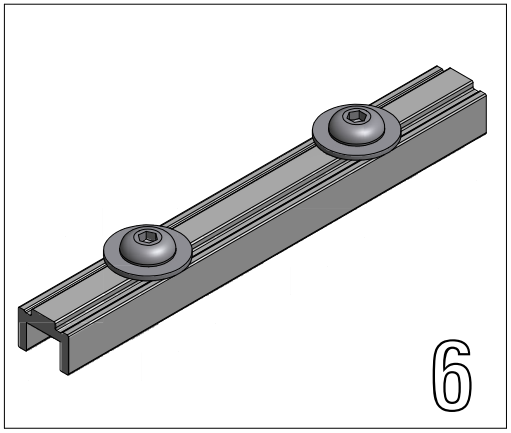

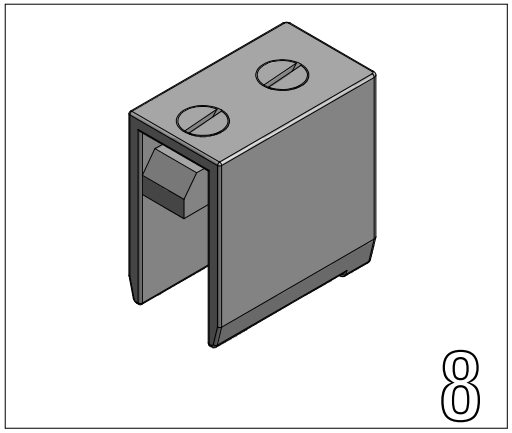

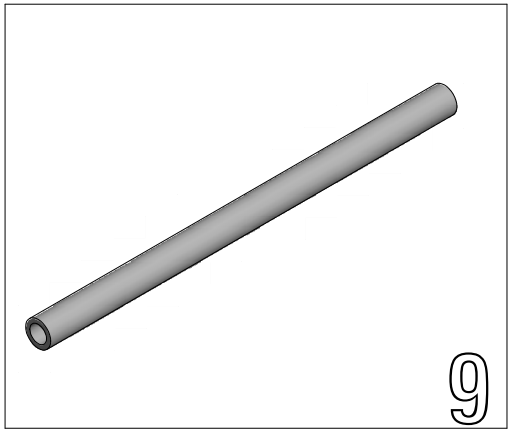

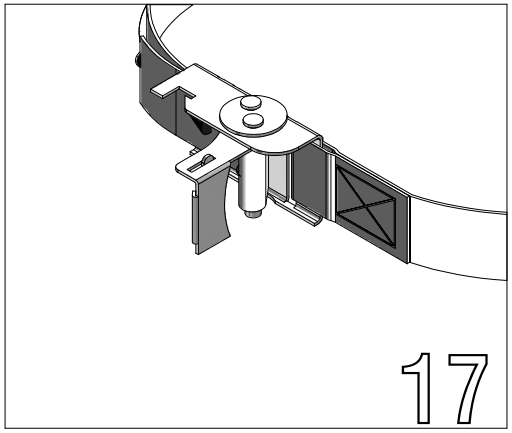

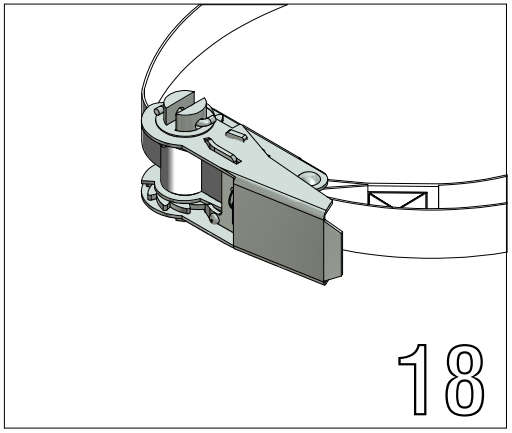

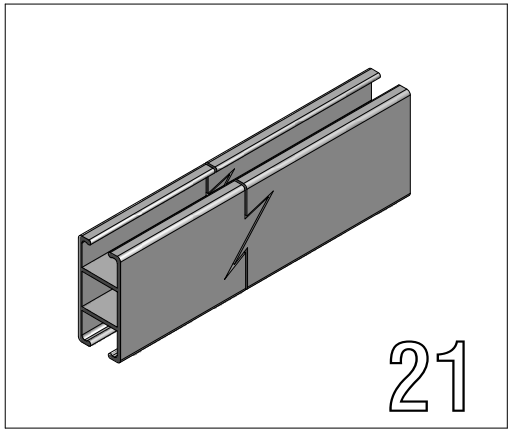

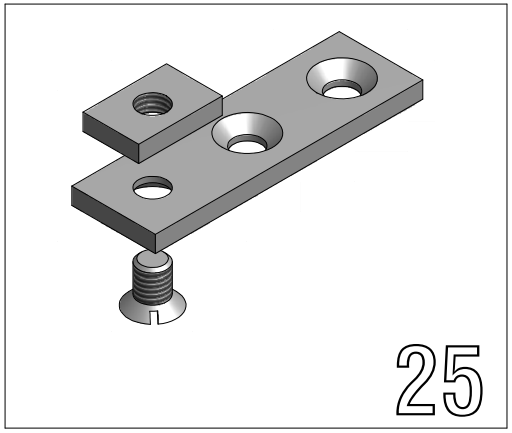

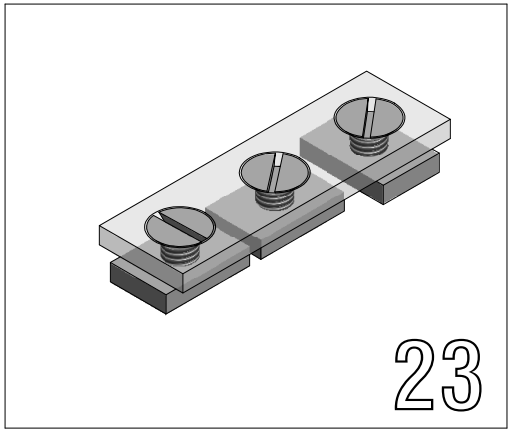

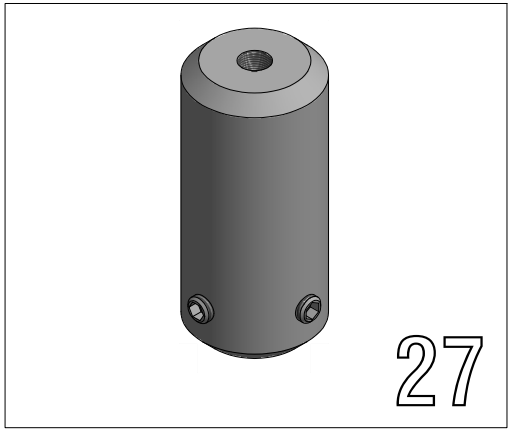

06.01

Type 6 , Standard Parts
FabricAir® Installation Drawing
2003-0601-000 (2014-FEB)

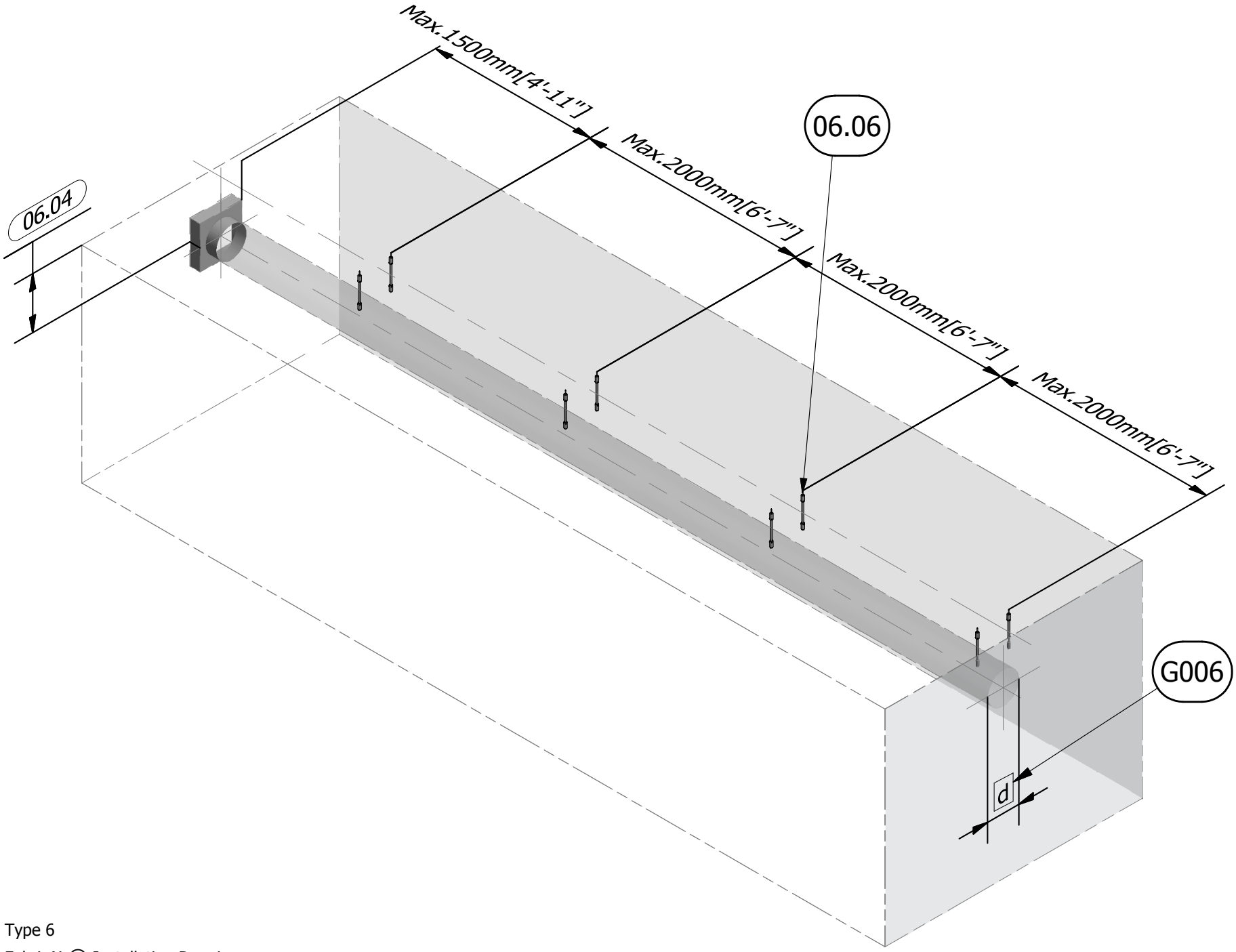

06.02

Type 6
FabricAir® Installation Drawing
2003-0602-000 (2014-FEB)

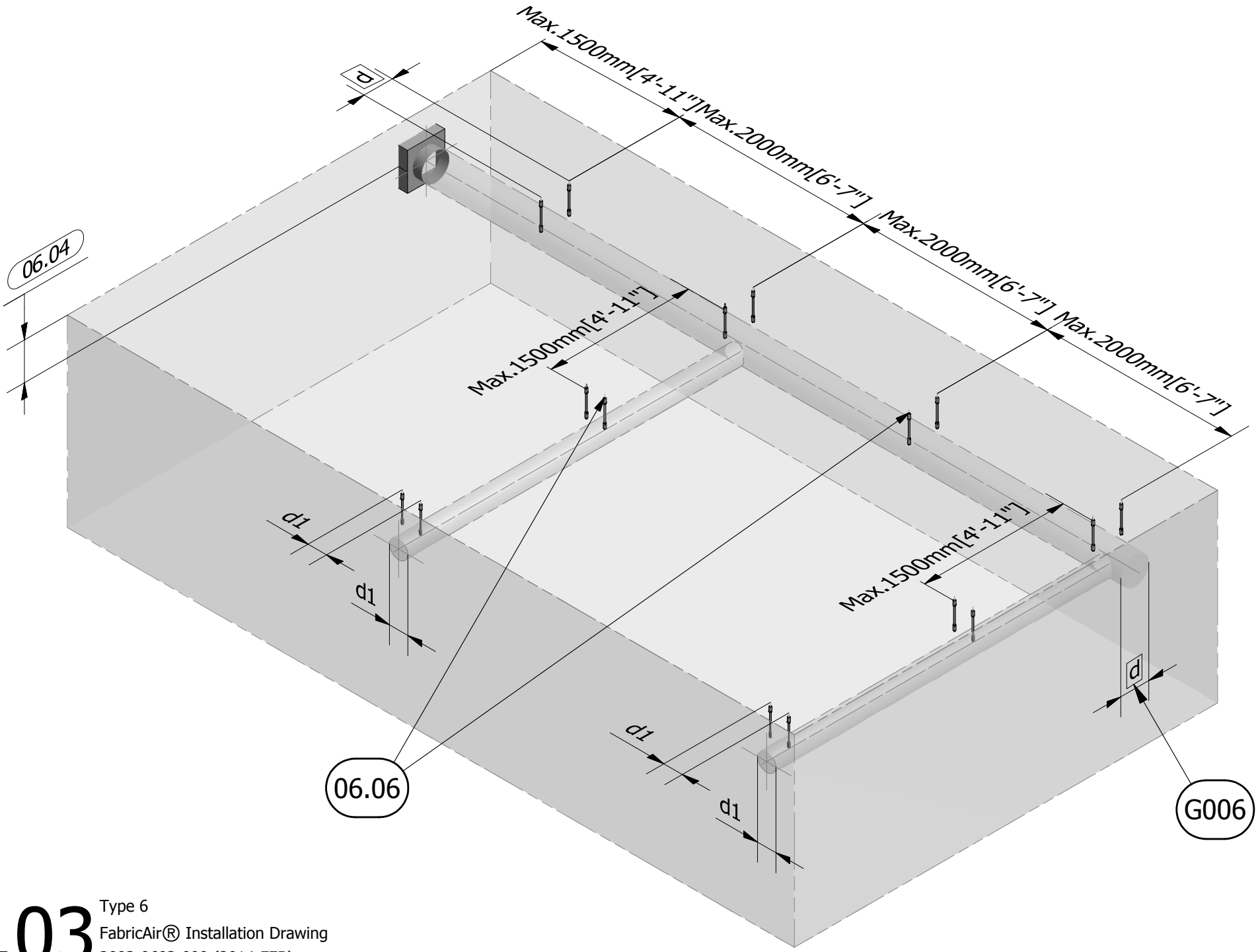

06.03

Type 6

FabricAir® Installation Drawing

2003-0603-000 (2014-FEB)

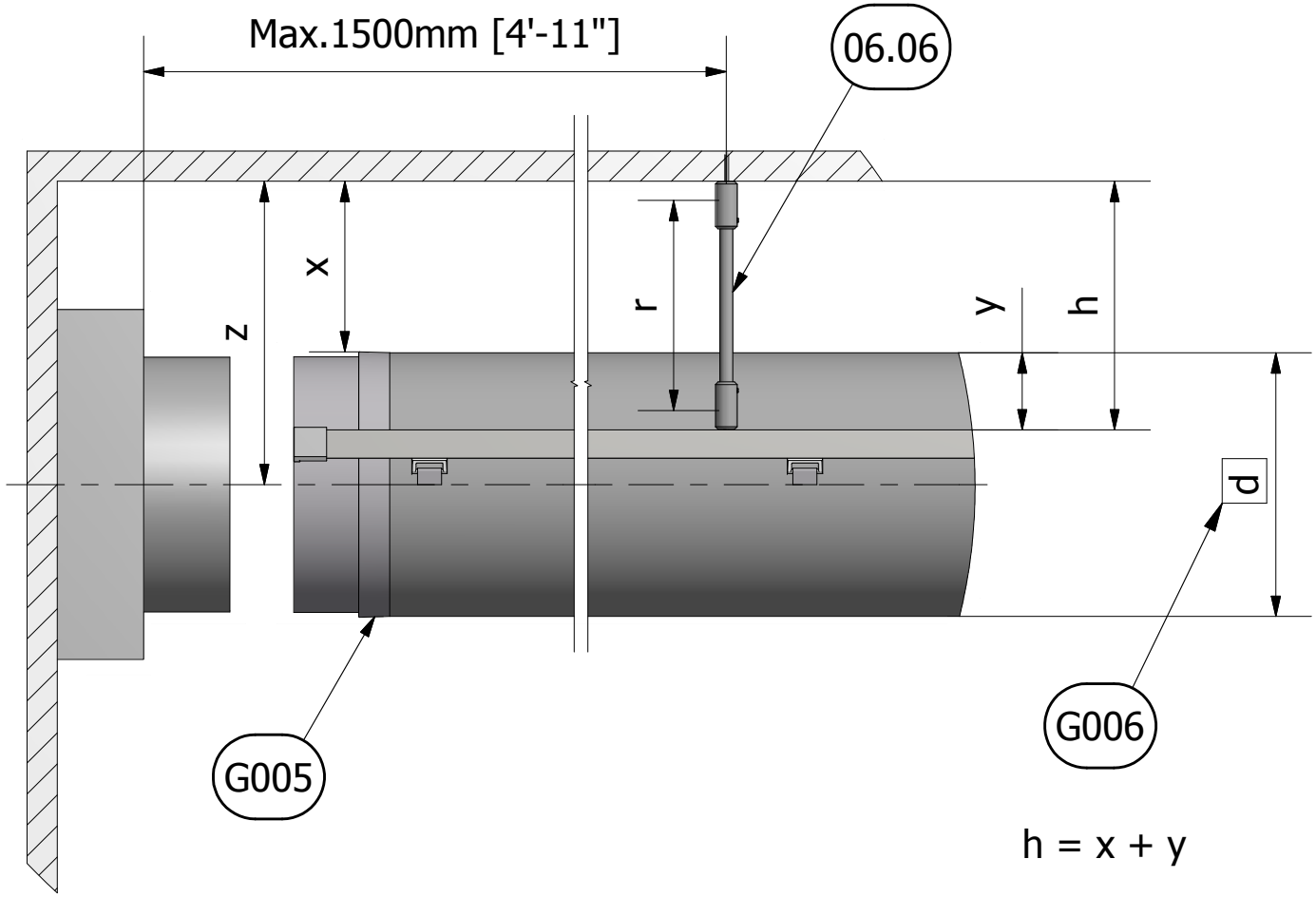

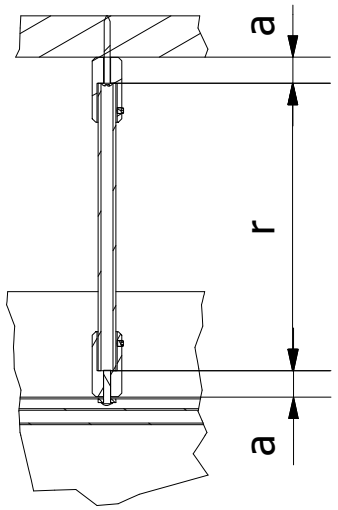

$h = x + y$

$y = \frac{1}{2}\ d - 63mm\ [1.6"]$

$h = z - 63mm[1.6"]$

$r = h - 2a$

$a = 22mm[0.8"]$

06.04

Type 6
FabricAir® Installation Drawing
2003-0604-000 (2014-FEB)

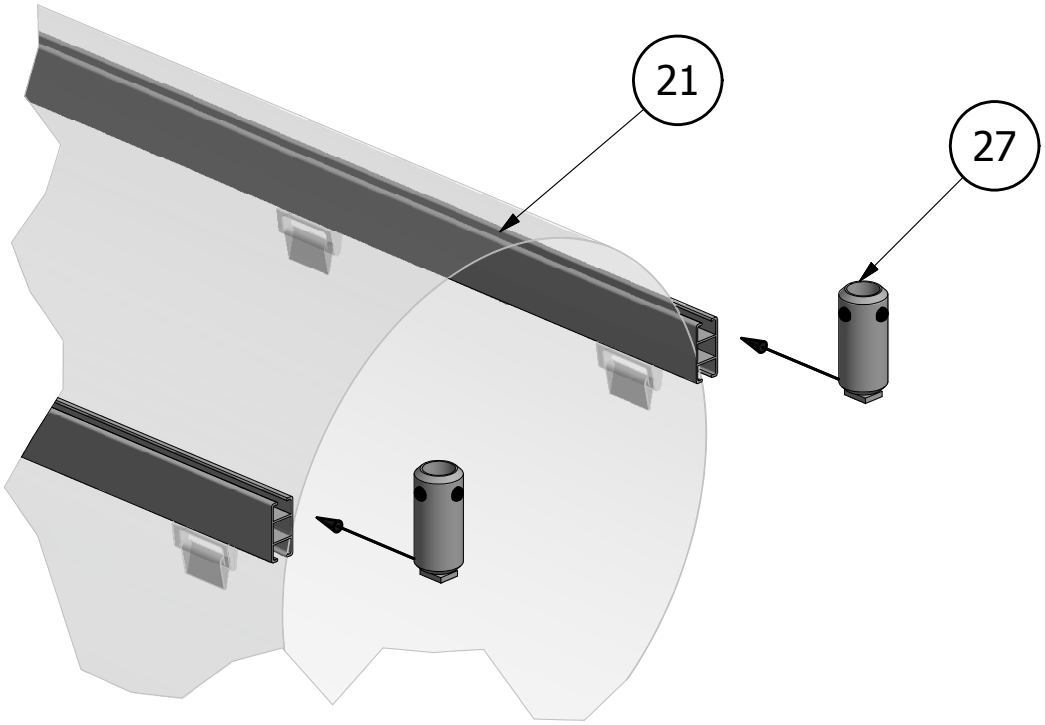

1

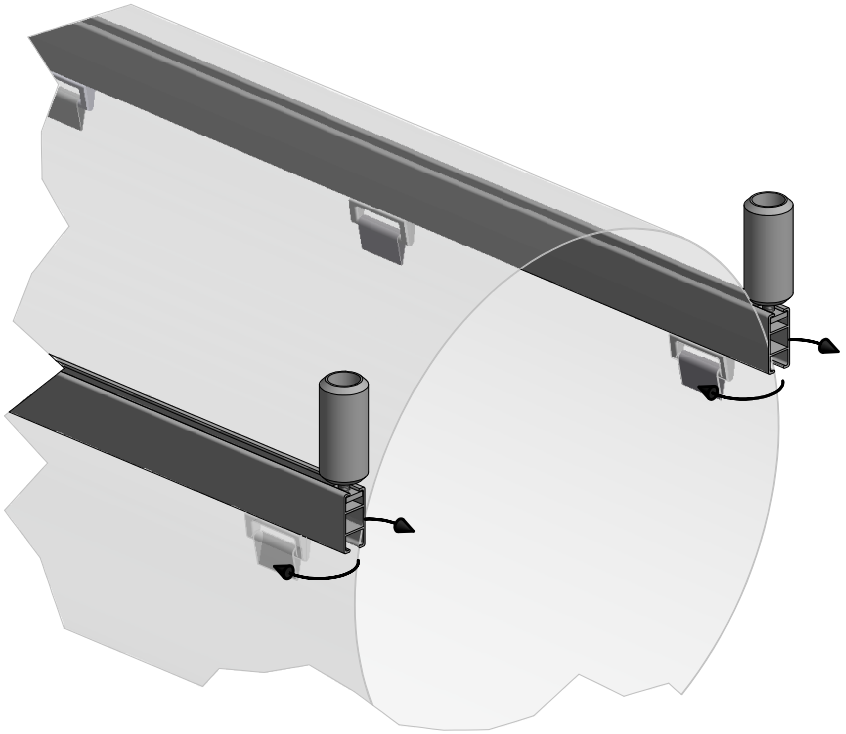

2

06.05

Type 6
FabricAir® Installation Drawing
2003-0605-000 (2014-FEB)

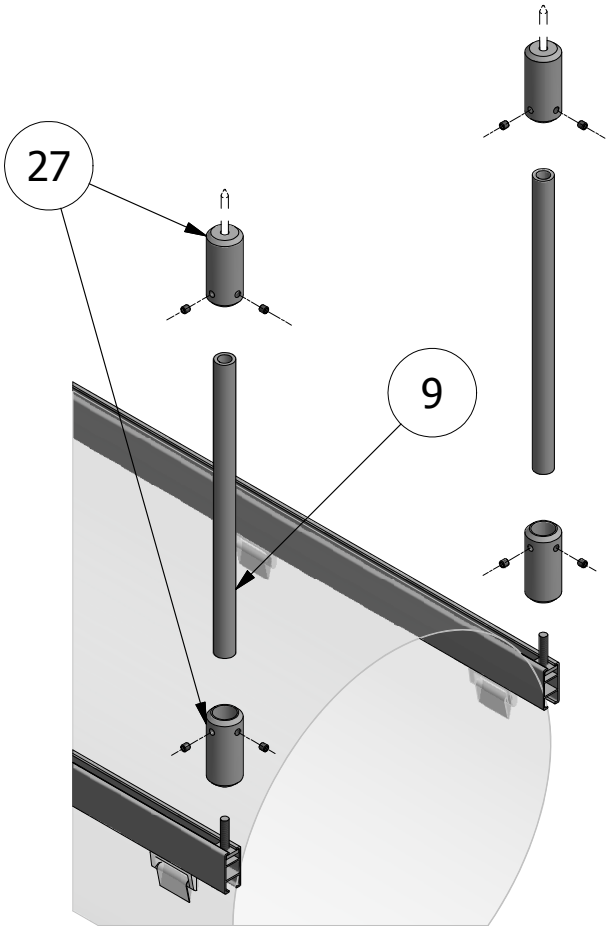

1

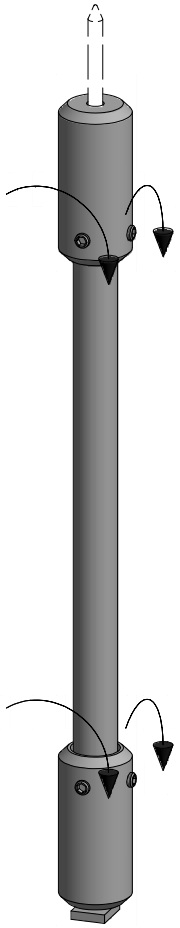

2

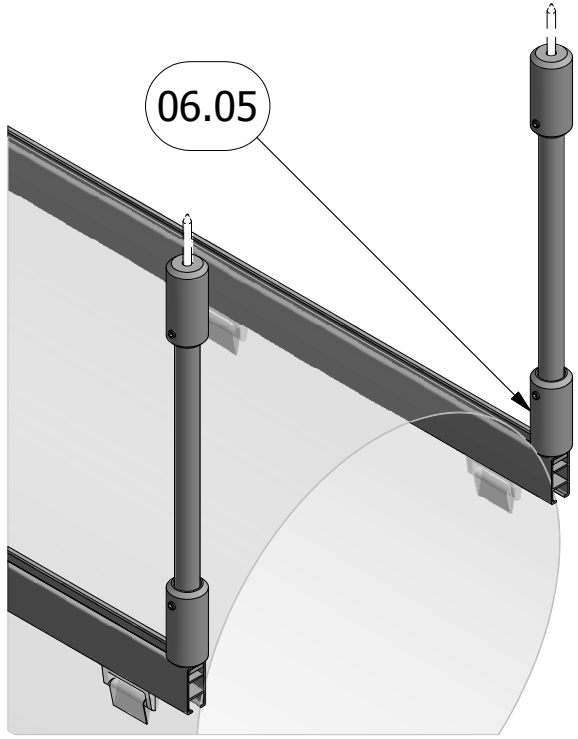

3

06.06

Type 6
FabricAir® Installation Drawing
2003-0606-000 (2014-FEB)

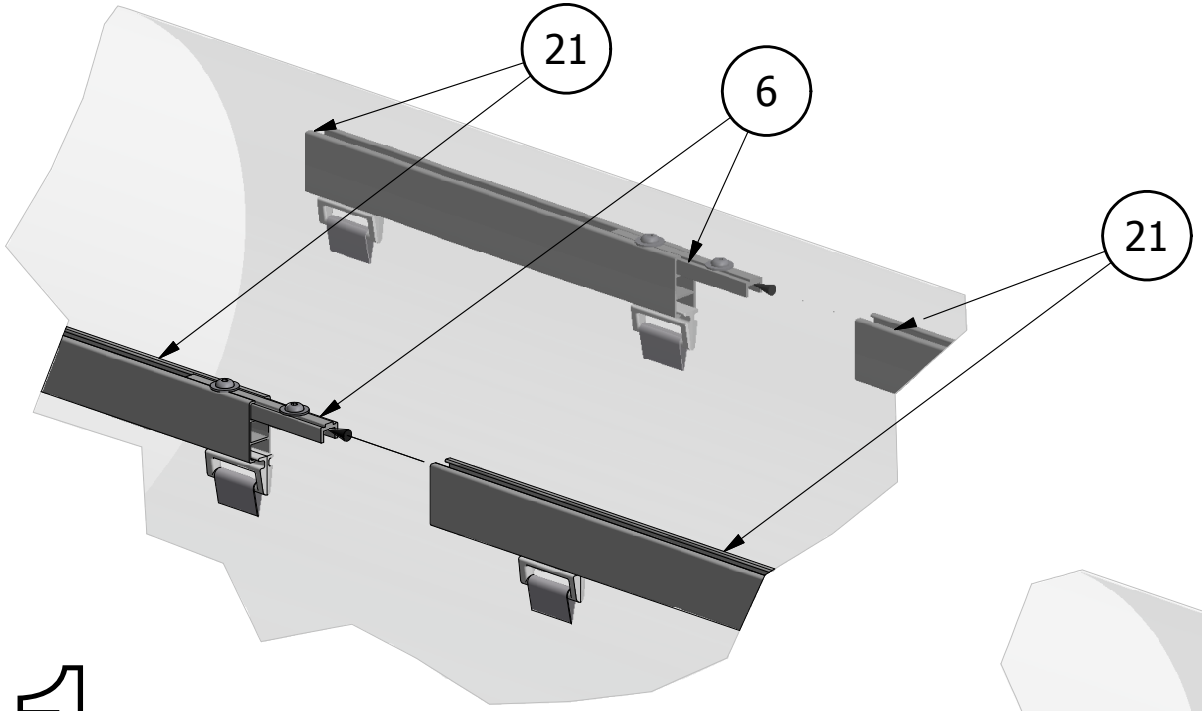

1

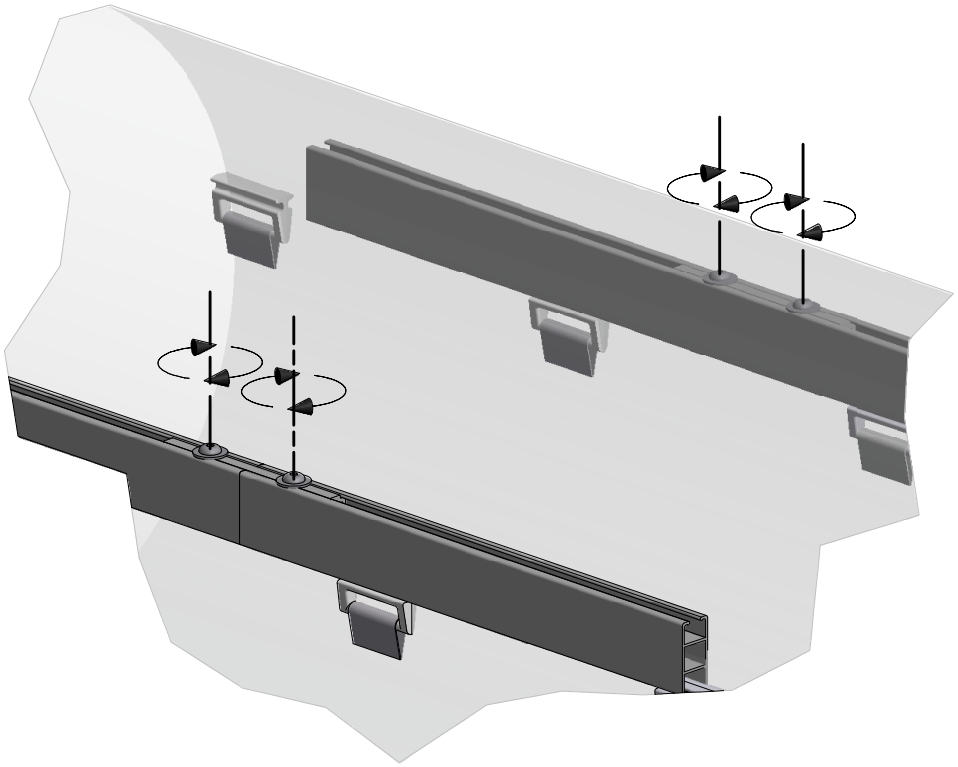

2

06.07

Type 6
FabricAir® Installation Drawing
2003-0607-000 (2014-FEB)

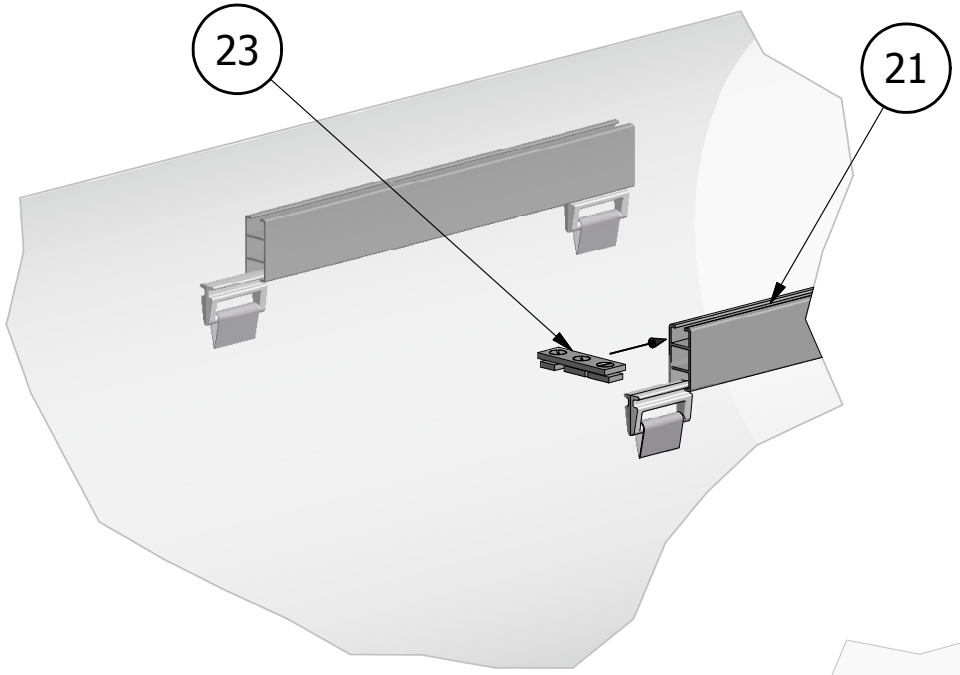

1

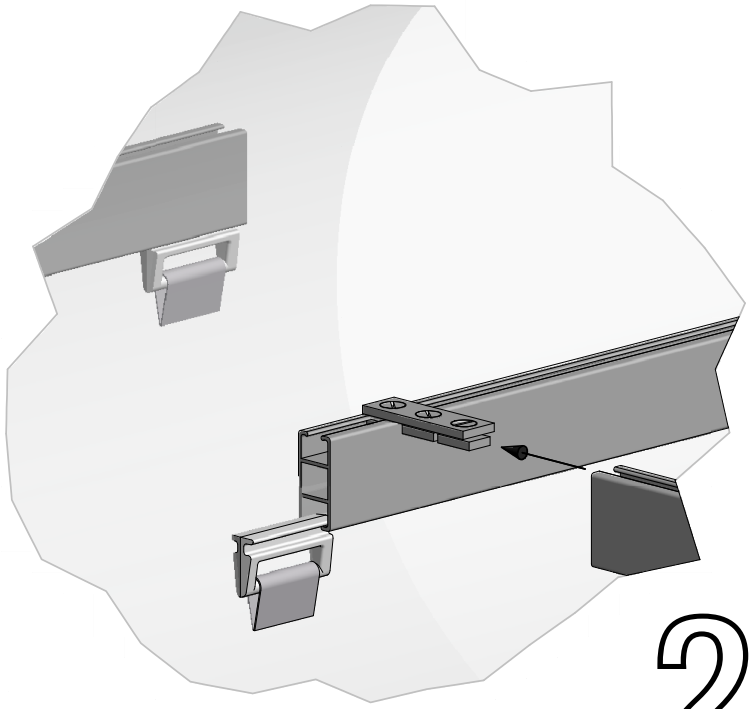

2

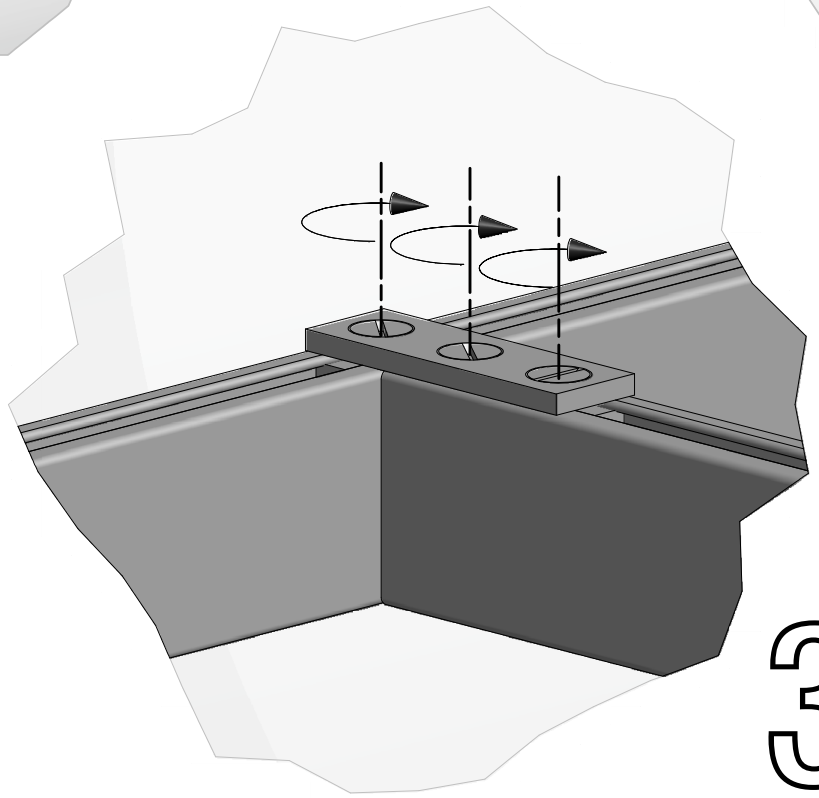

3

06.08

Type 6
FabricAir® Installation Drawing
2003-0608-000 (2014-FEB)

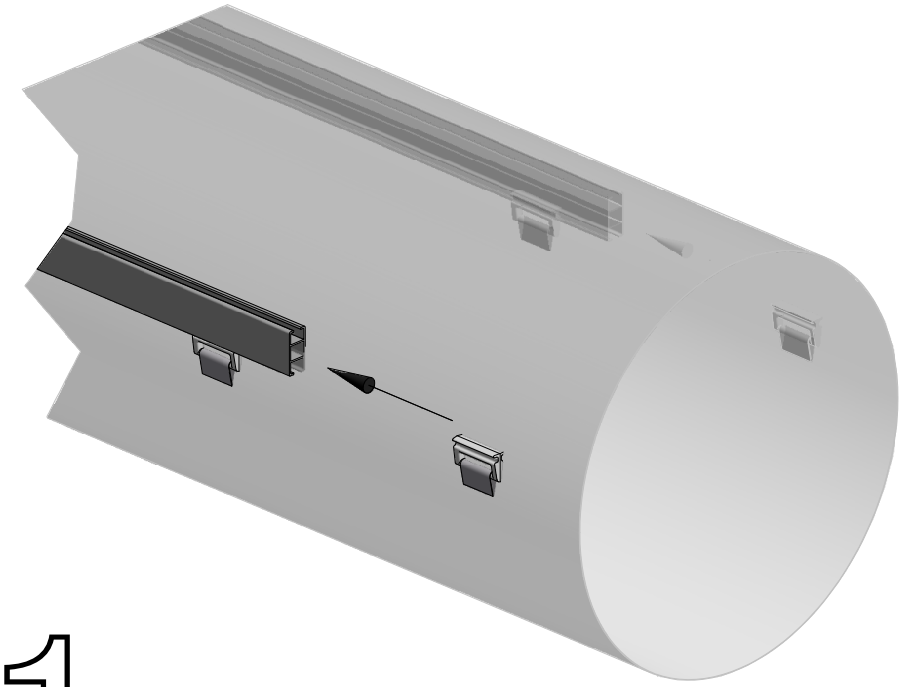

1

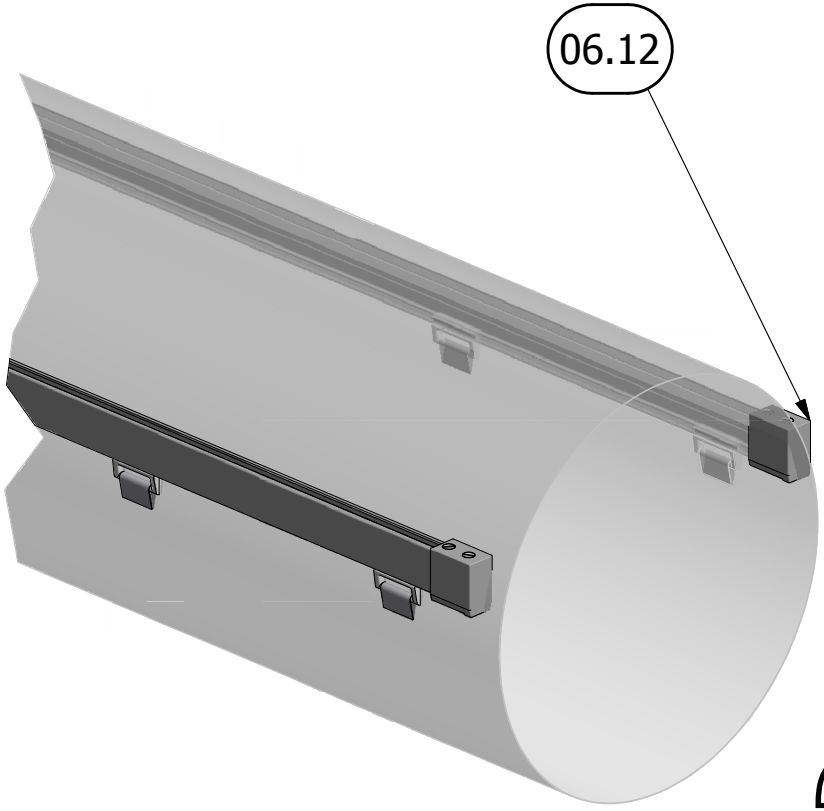

2

06.09

Type 6
FabricAir® Installation Drawing
2003-0609-000 (2014-FEB)

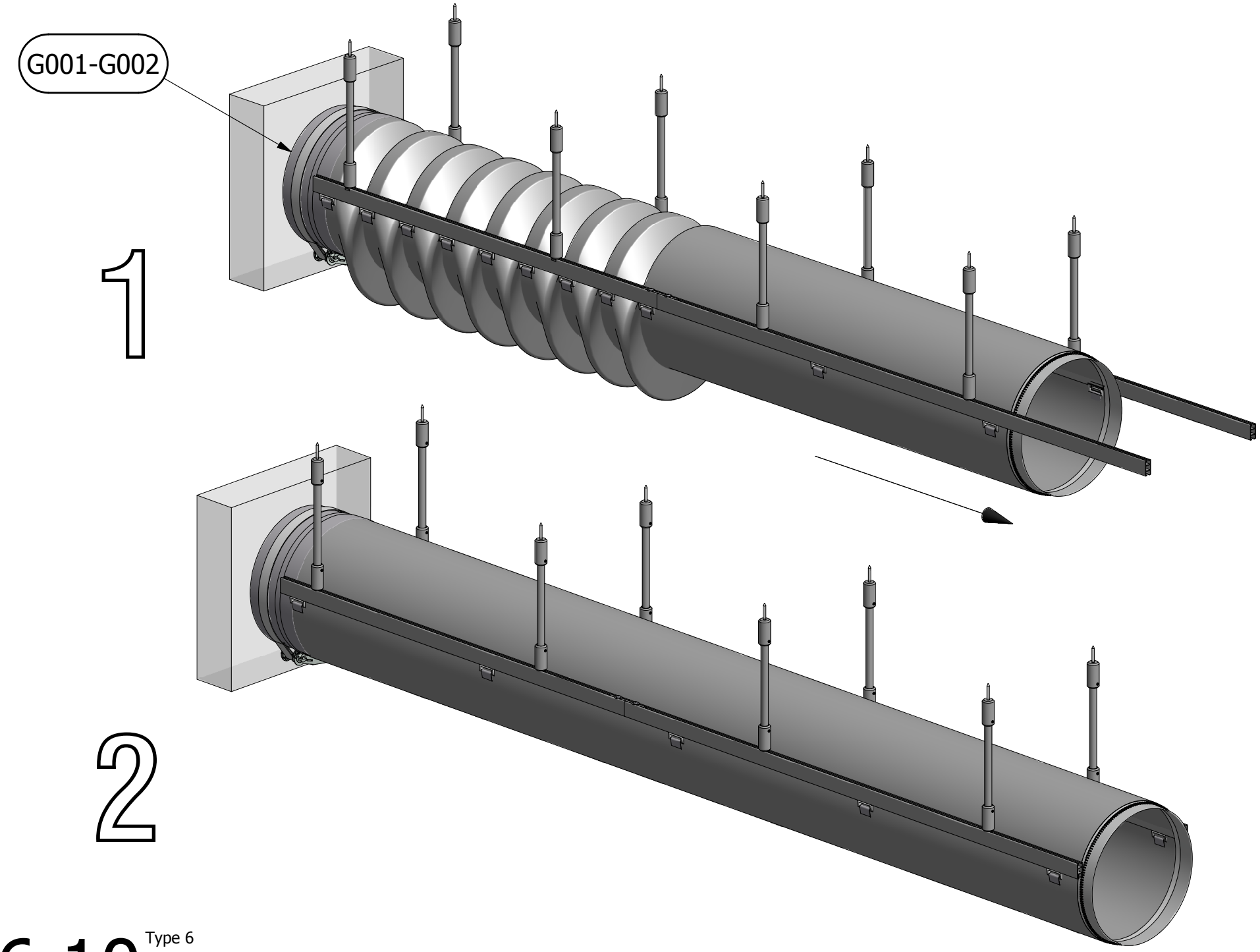

06.10

Type 6
FabricAir® Installation Drawing
2003-0610-000 (2014-FEB)

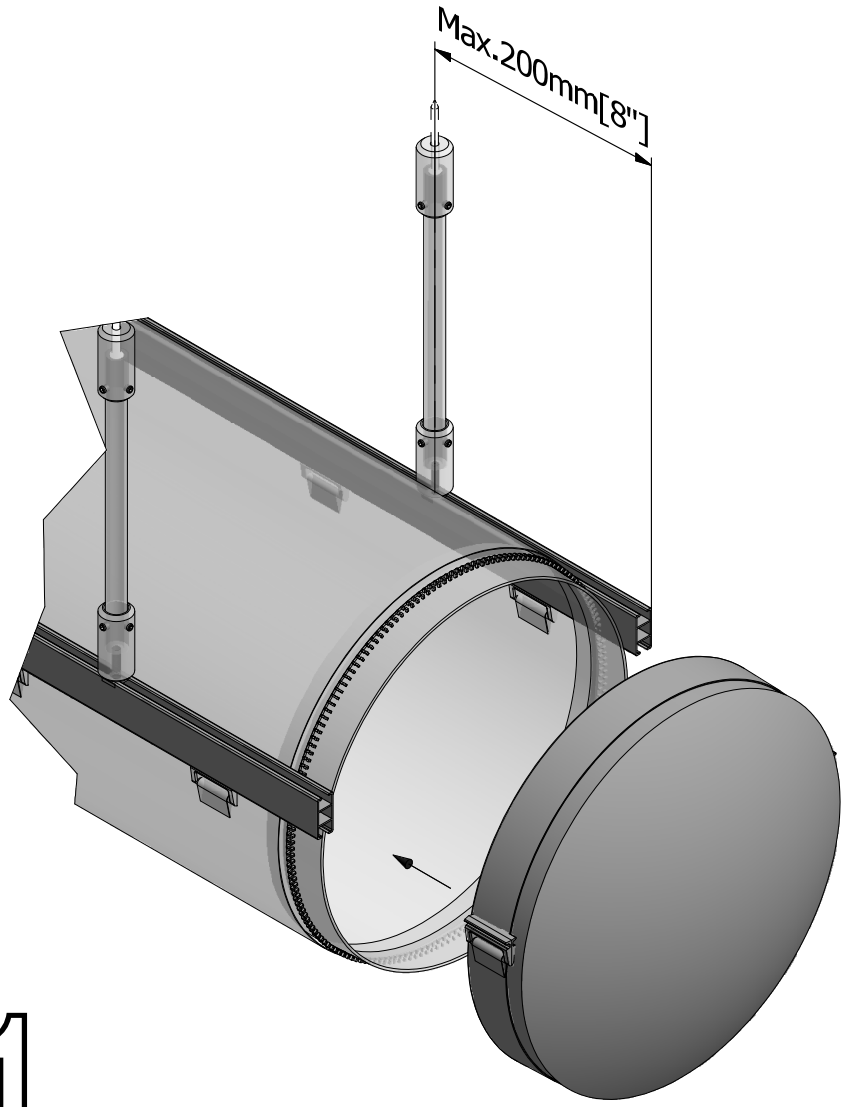

1

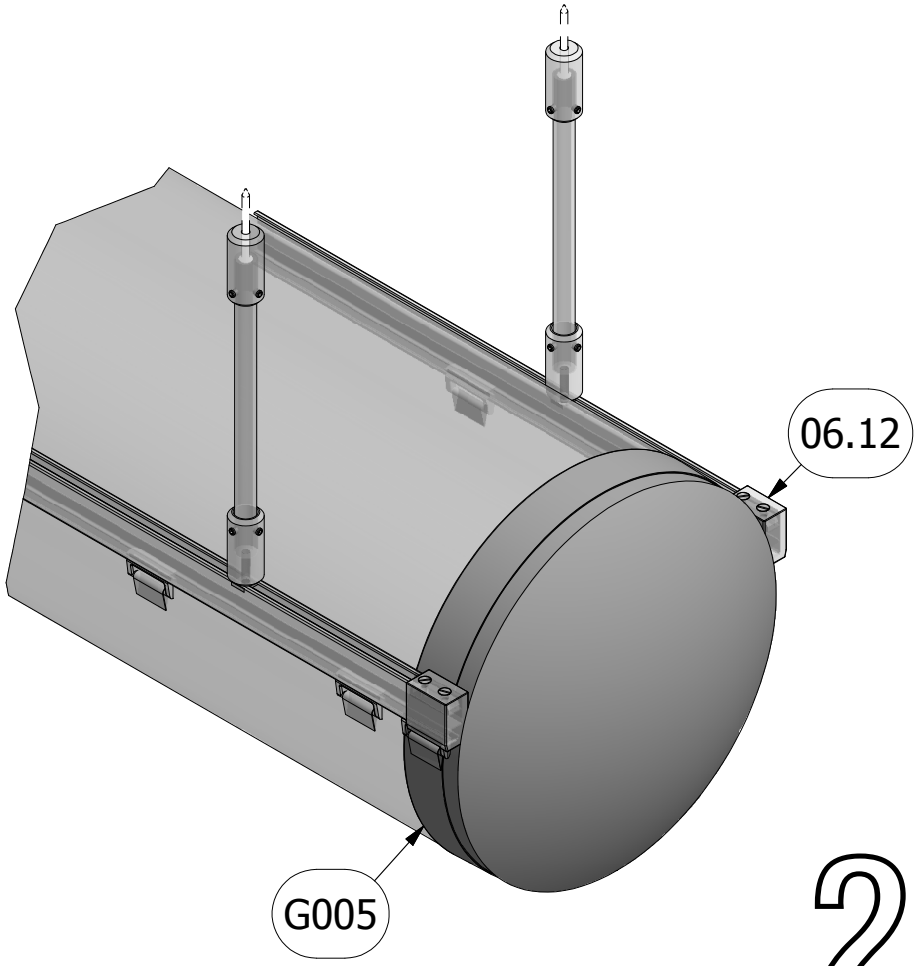

2

06.11

Type 6
FabricAir® Installation Drawing
2003-0611-000 (2014-FEB)

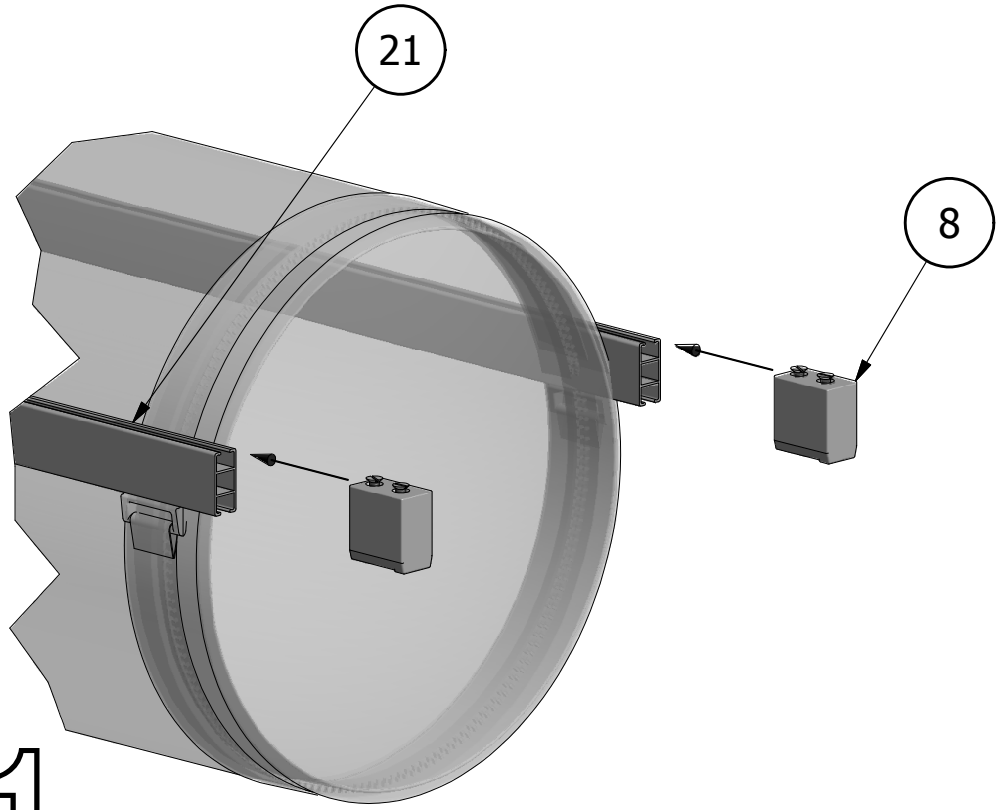

1

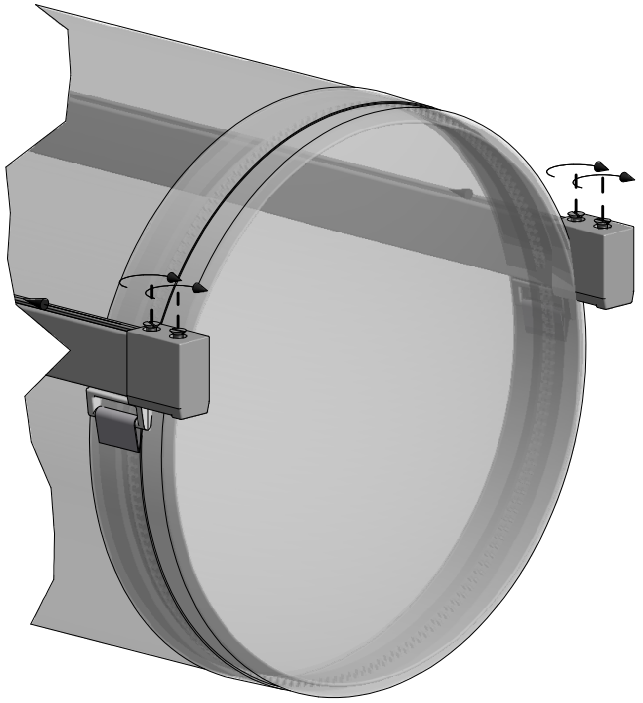

2

06.12

Type 6
FabricAir® Installation Drawing
2003-0612-000 (2014-FEB)

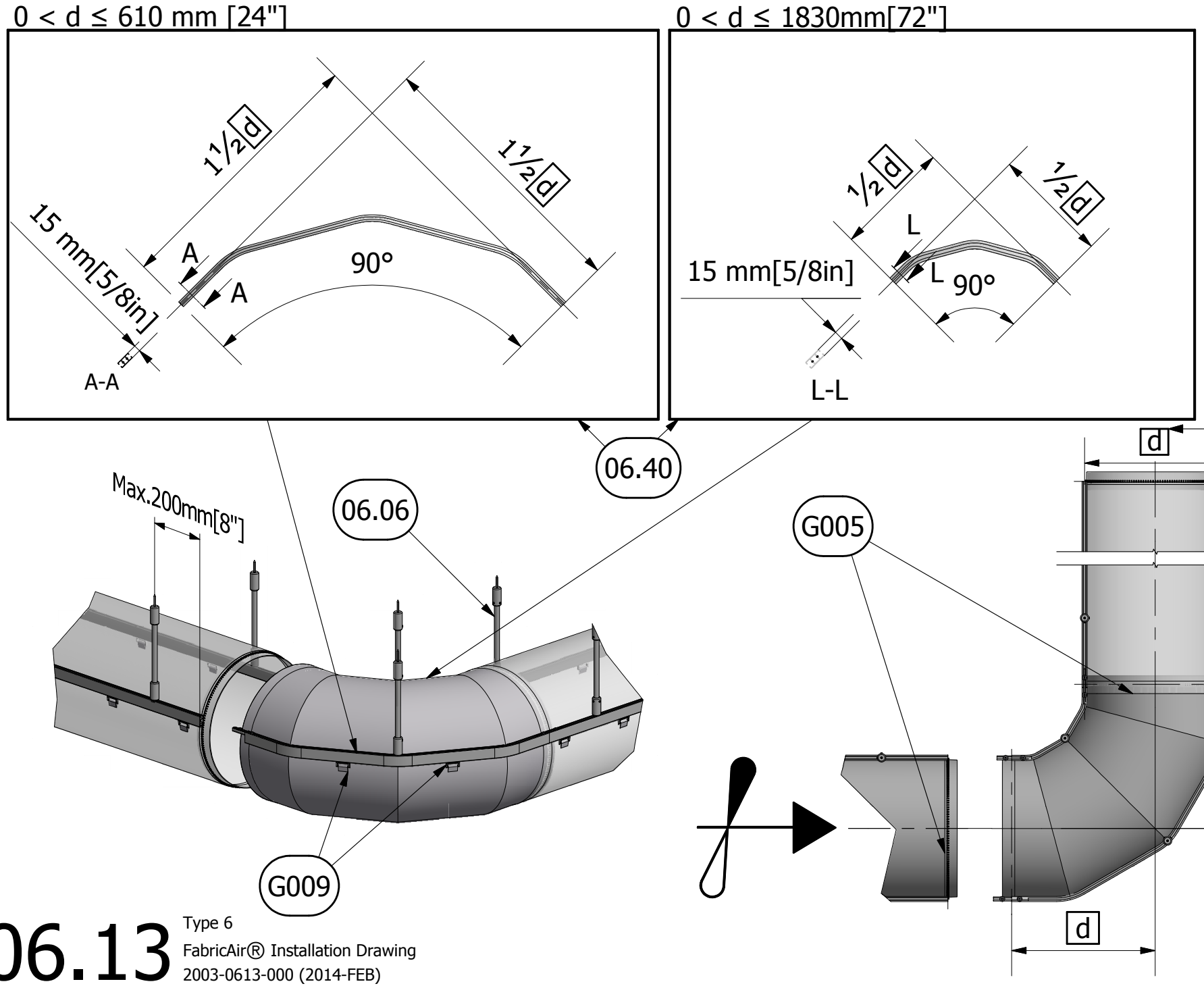

06.13

Type 6
FabricAir® Installation Drawing
2003-0613-000 (2014-FEB)

611mm[24"] < d ≤ 2035mm[80"]

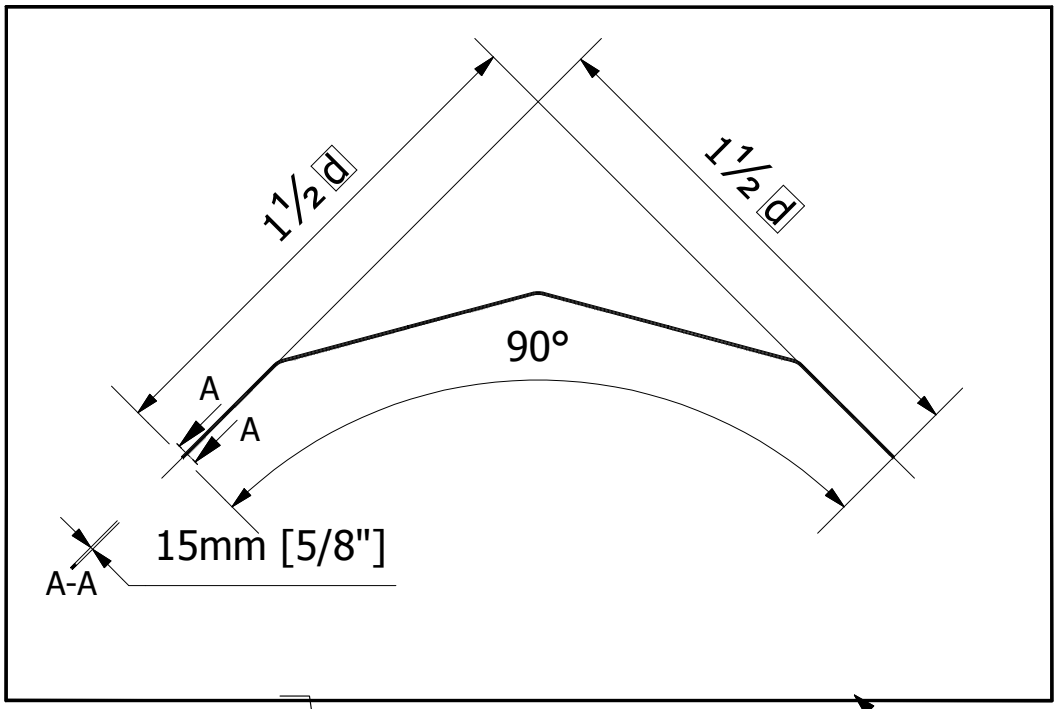

1831mm[72"] < d ≤ 2035mm[80"]

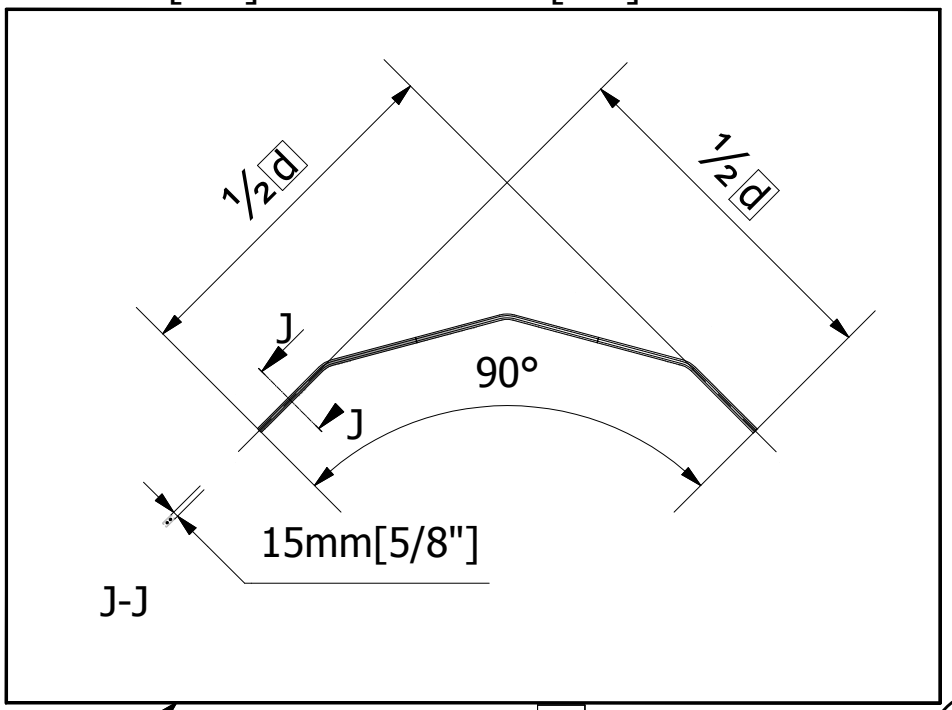

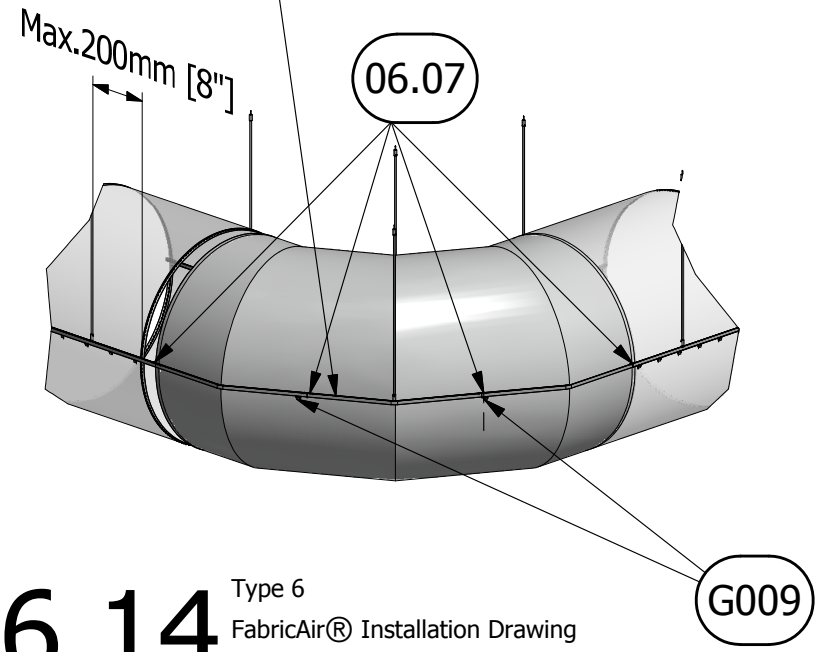

06.40

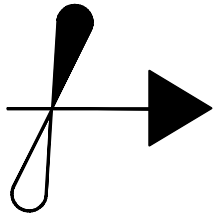

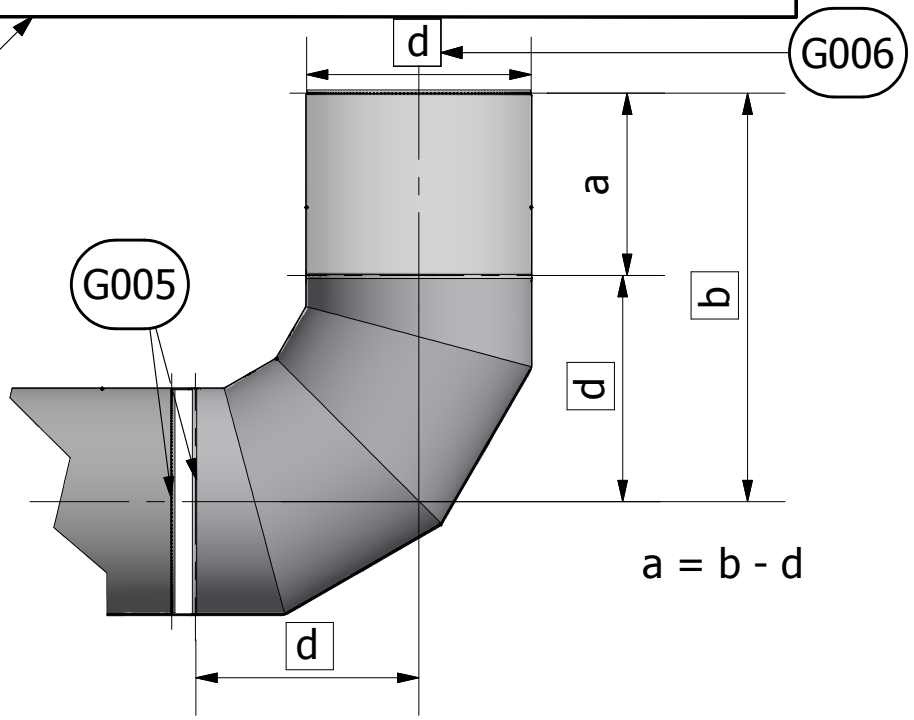

06.14

Type 6
FabricAir® Installation Drawing
2003-0614-000 (2014-FEB)

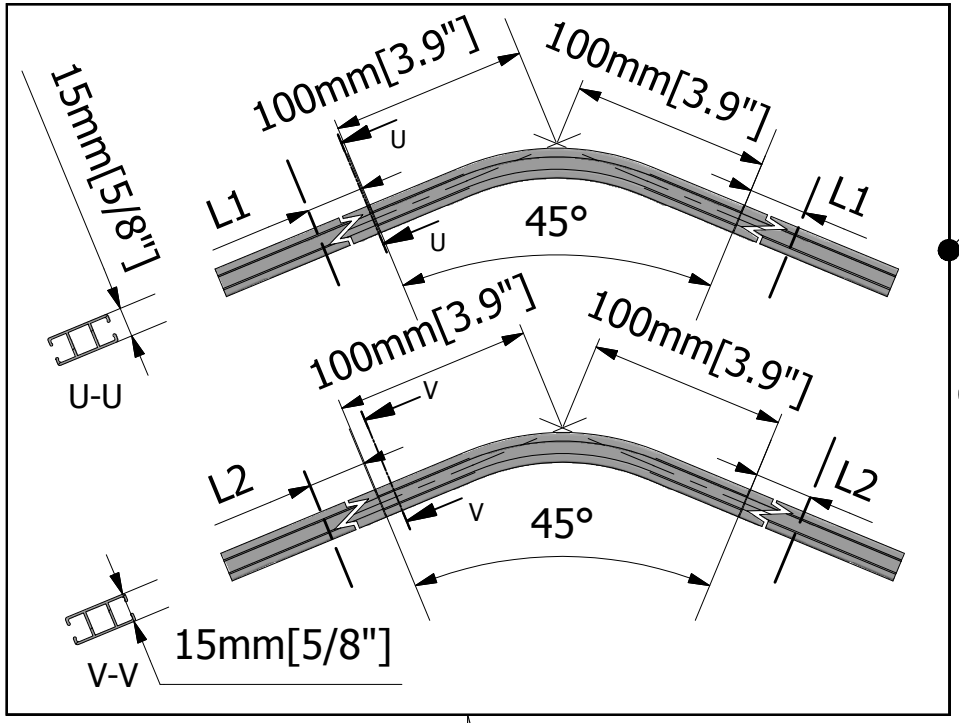

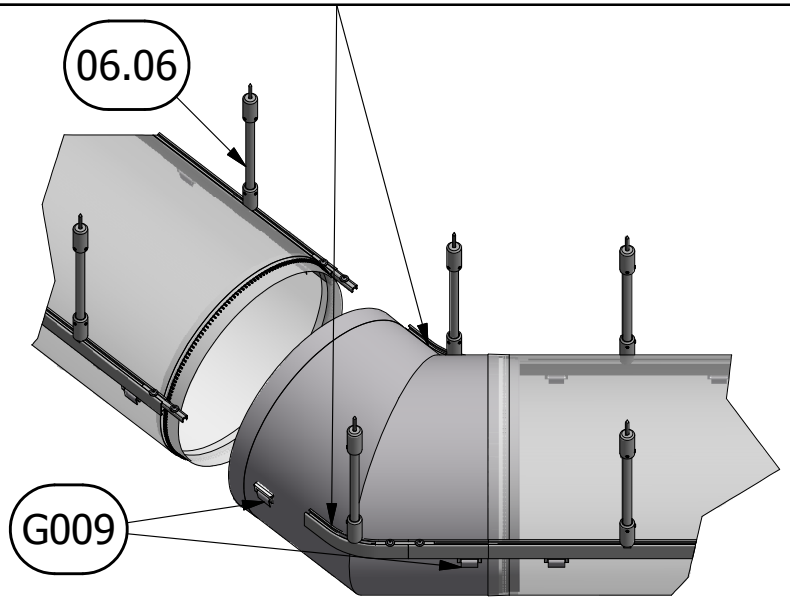

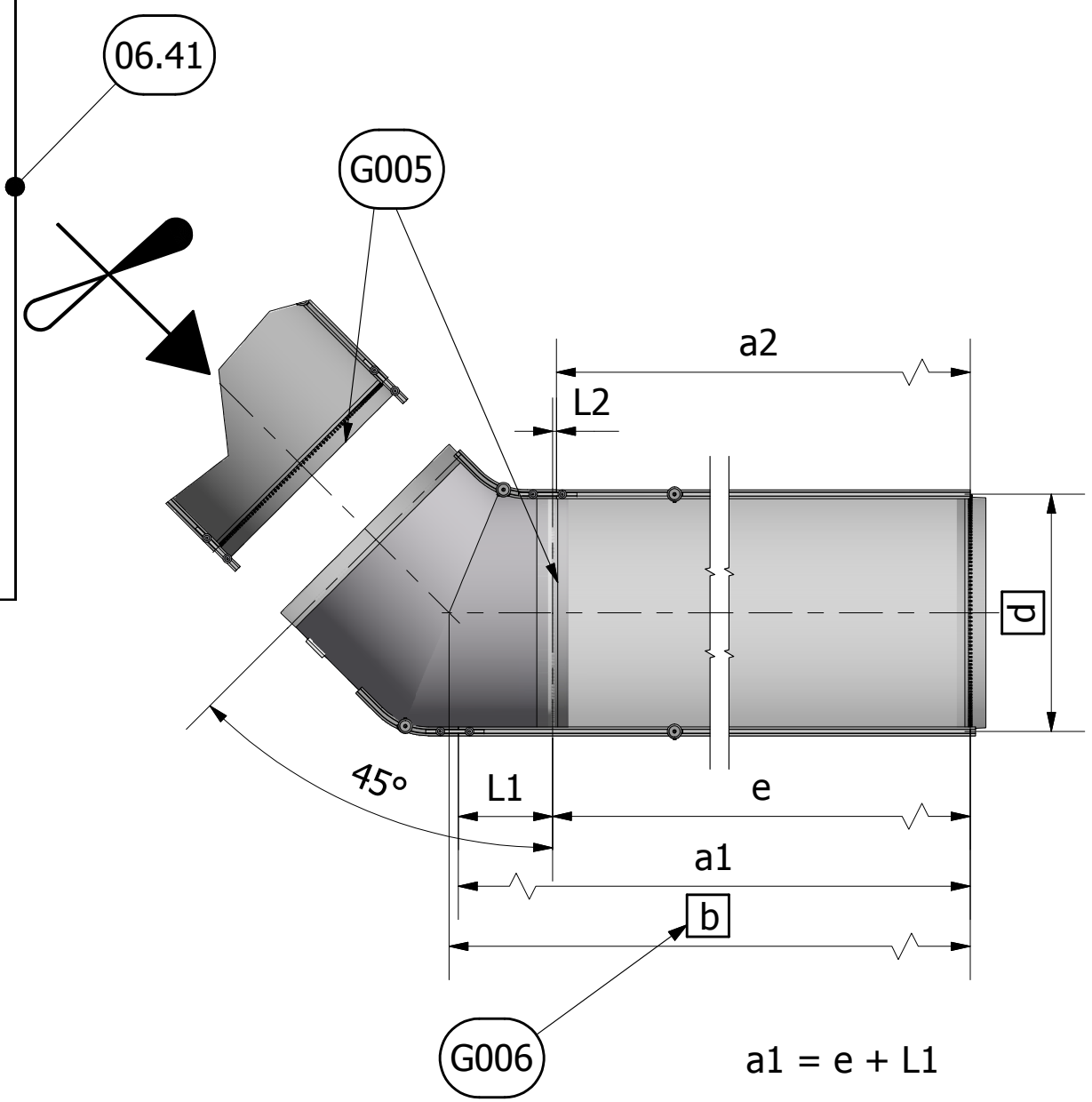

a1 = e + L1

a2 = e + L2

L1 , L2 ⟶ 06.41

06.15

Type 6

FabricAir® Installation Drawing

2003-0615-000 (2014-FEB)

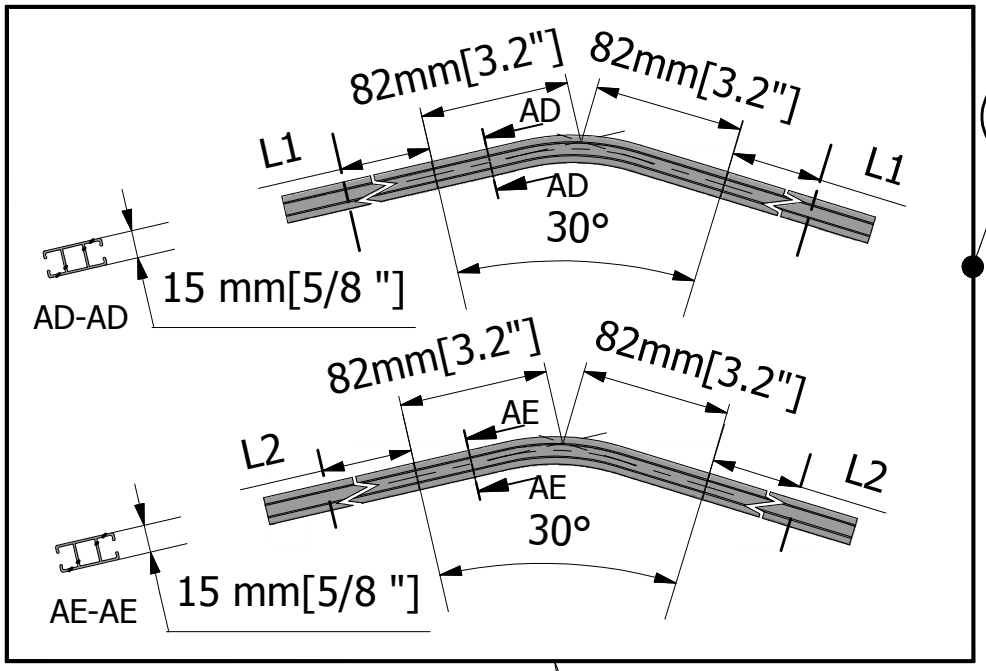

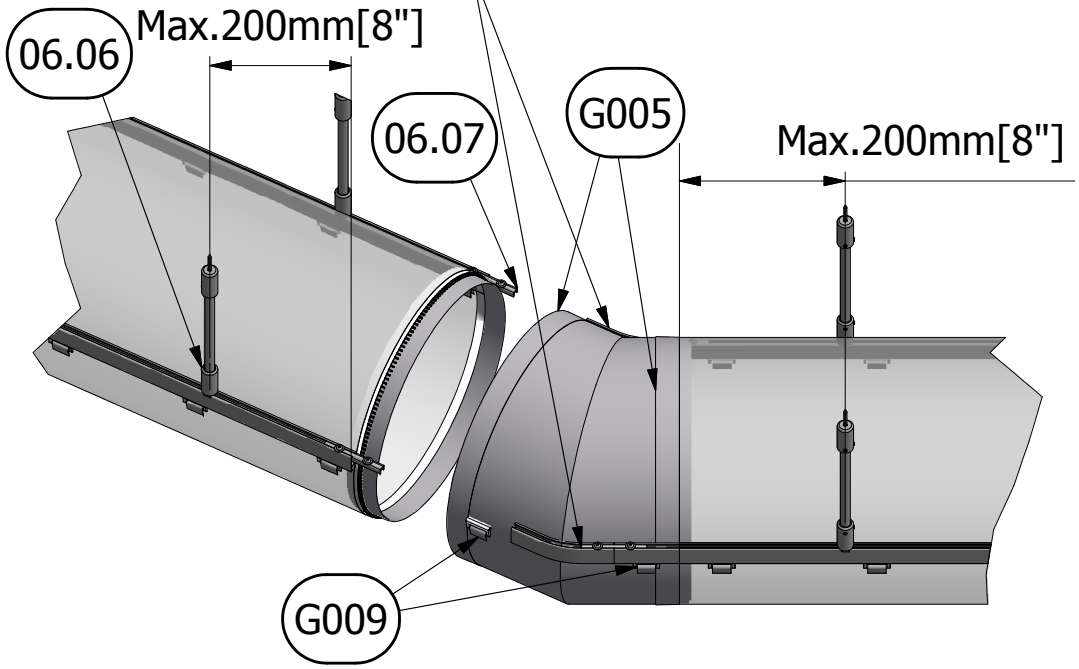

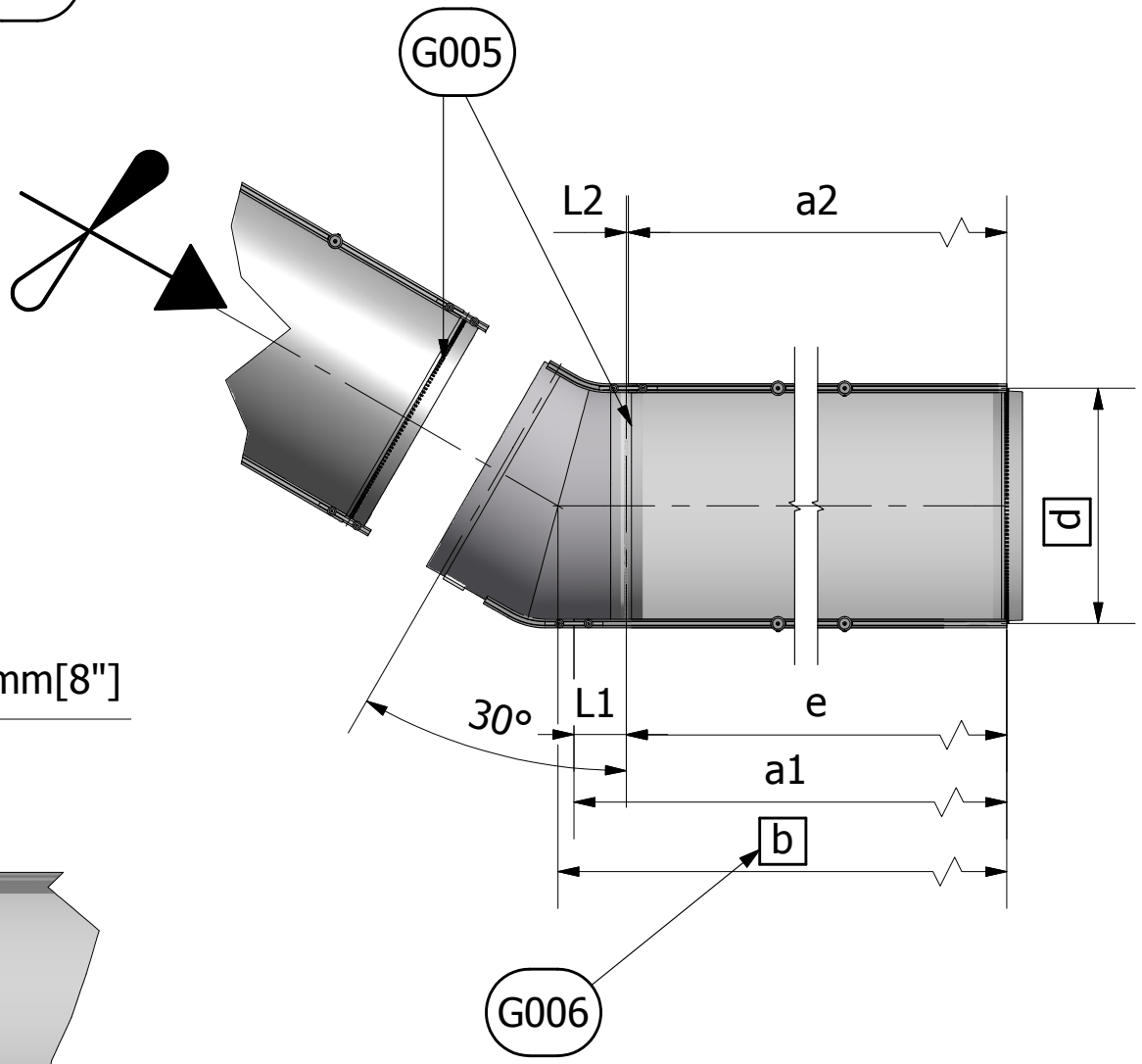

a1 = e + L1

a2 = e + L2

L1 , L2 ⟶ 06.42

06.16

Type 6

FabricAir® Installation Drawing

2003-0616-000 (2014-FEB)

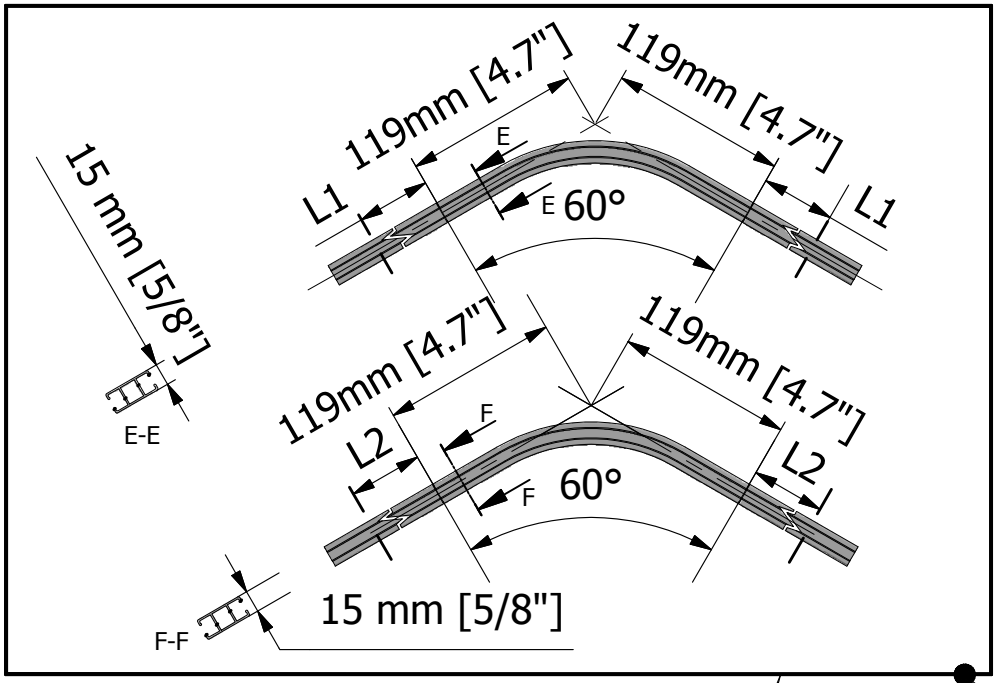

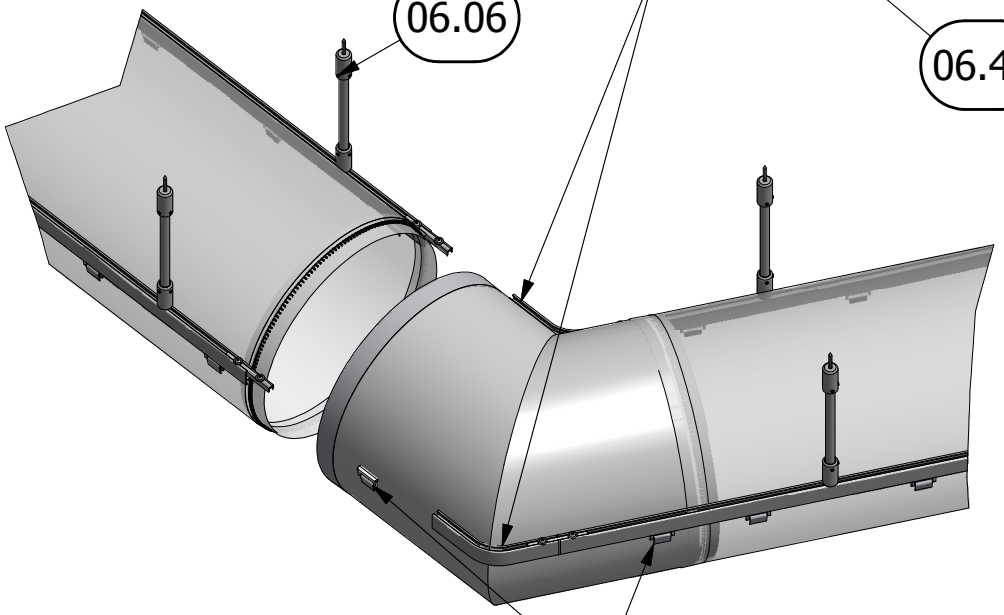

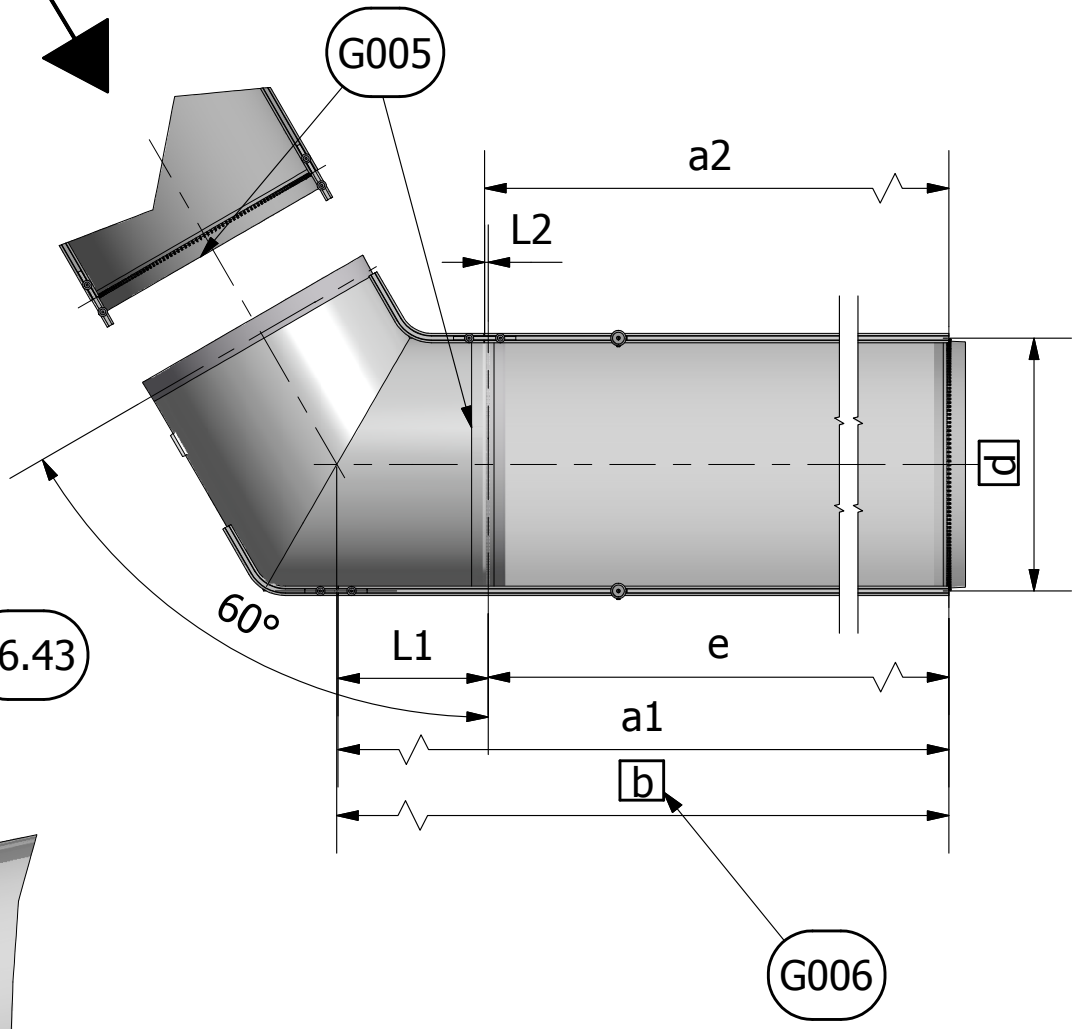

a1 = e + L1

a2 = e + L2

L1, L2 ⟶ 06.43

06.17

Type 6

FabricAir® Installation Drawing

2003-0617-000 (2014-FEB)

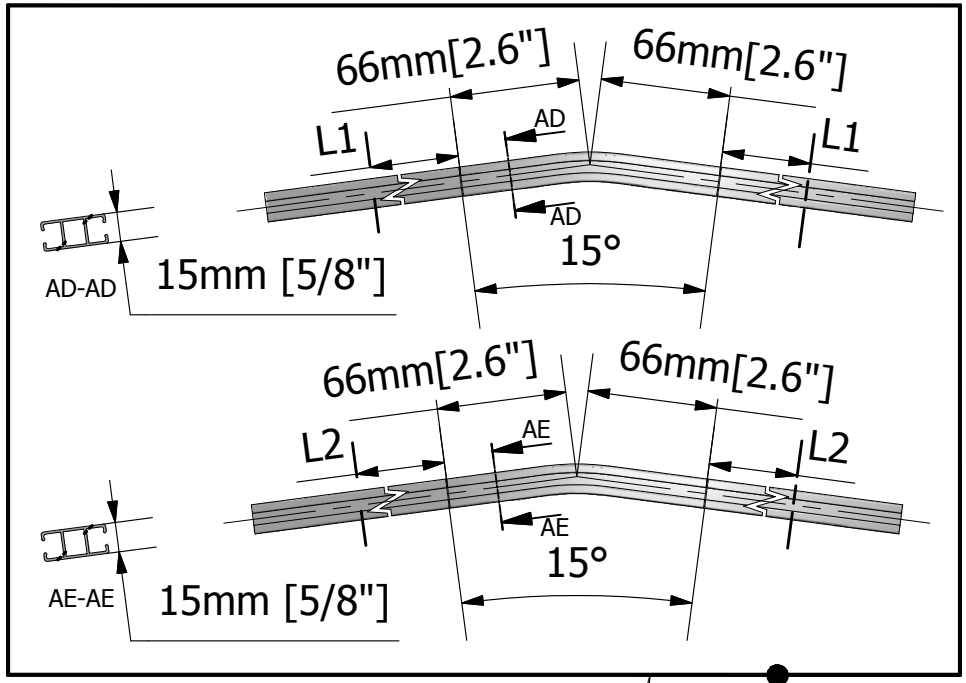

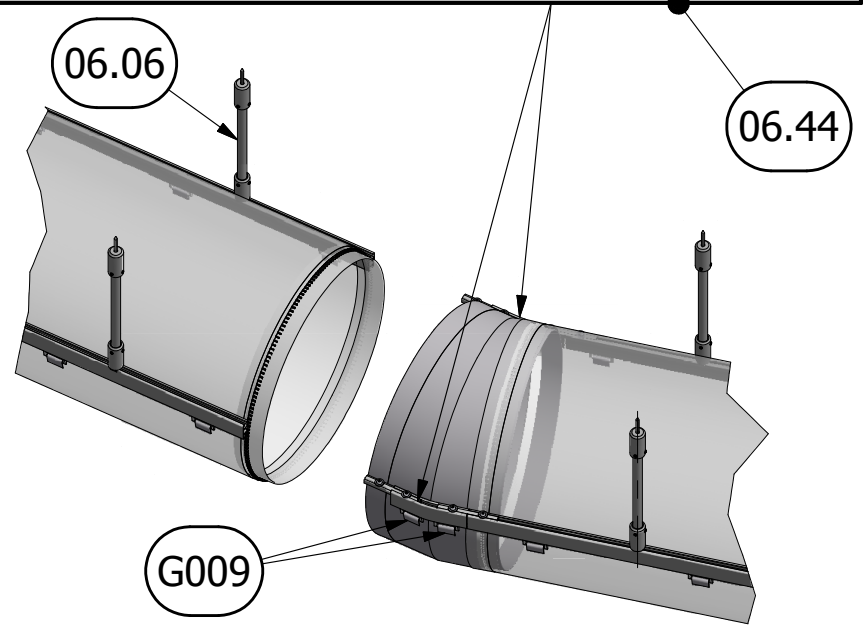

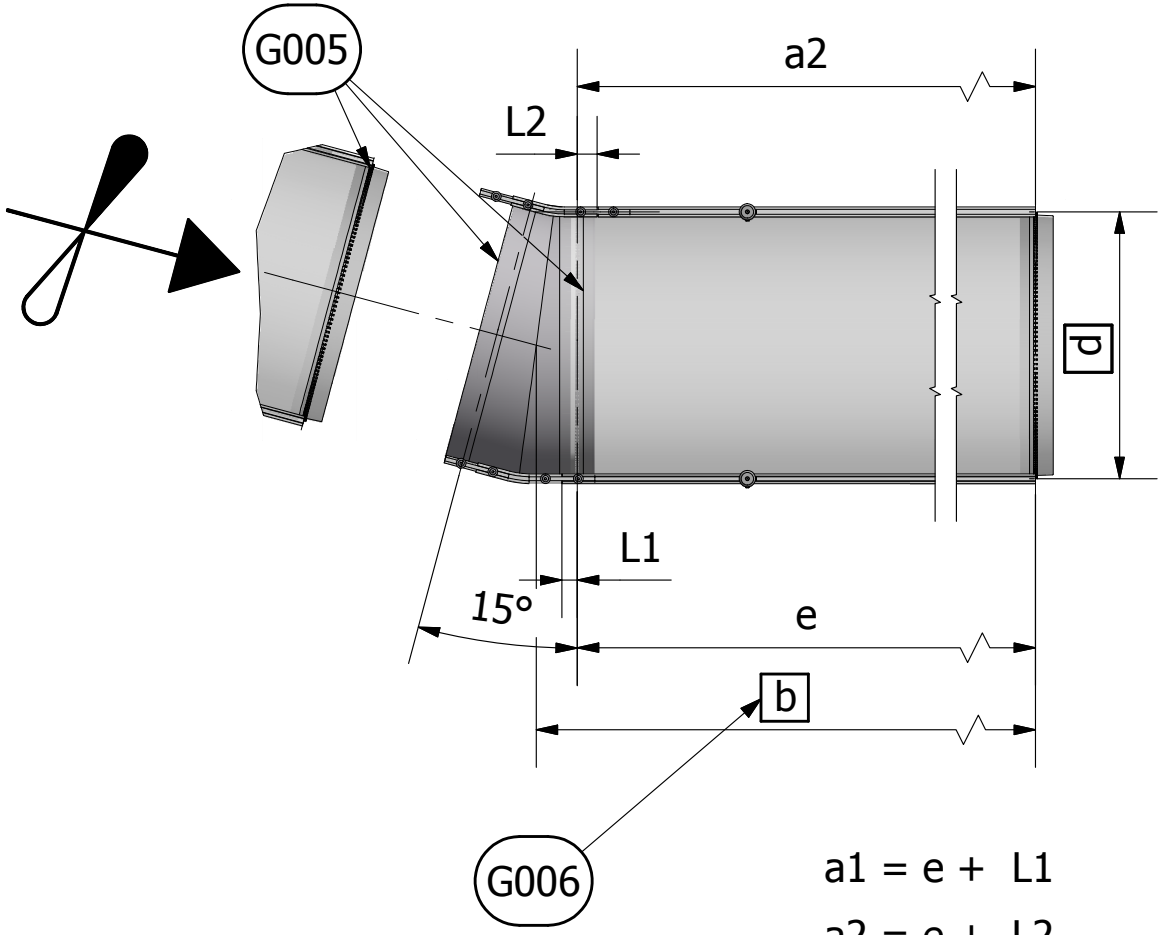

a1 = e + L1

a2 = e + L2

L1, L2 ⟶ 06.44

06.18

Type 6

FabricAir® Installation Drawing

2003-0618-000 (2014-FEB)

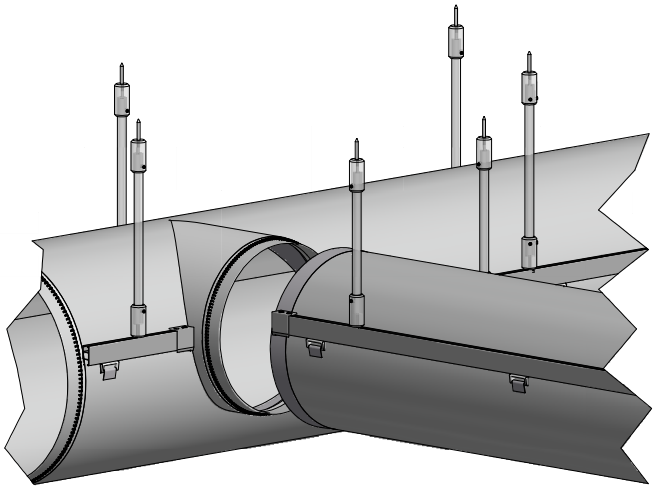

1

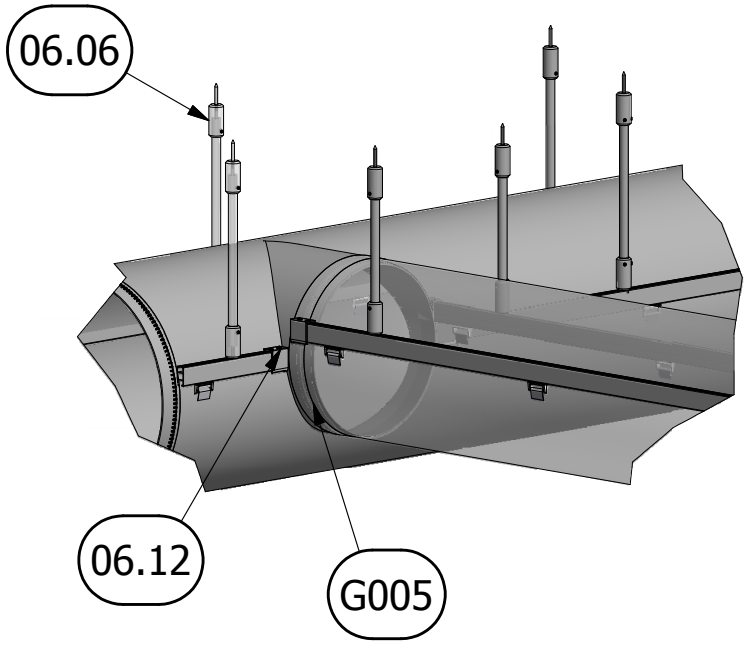

2

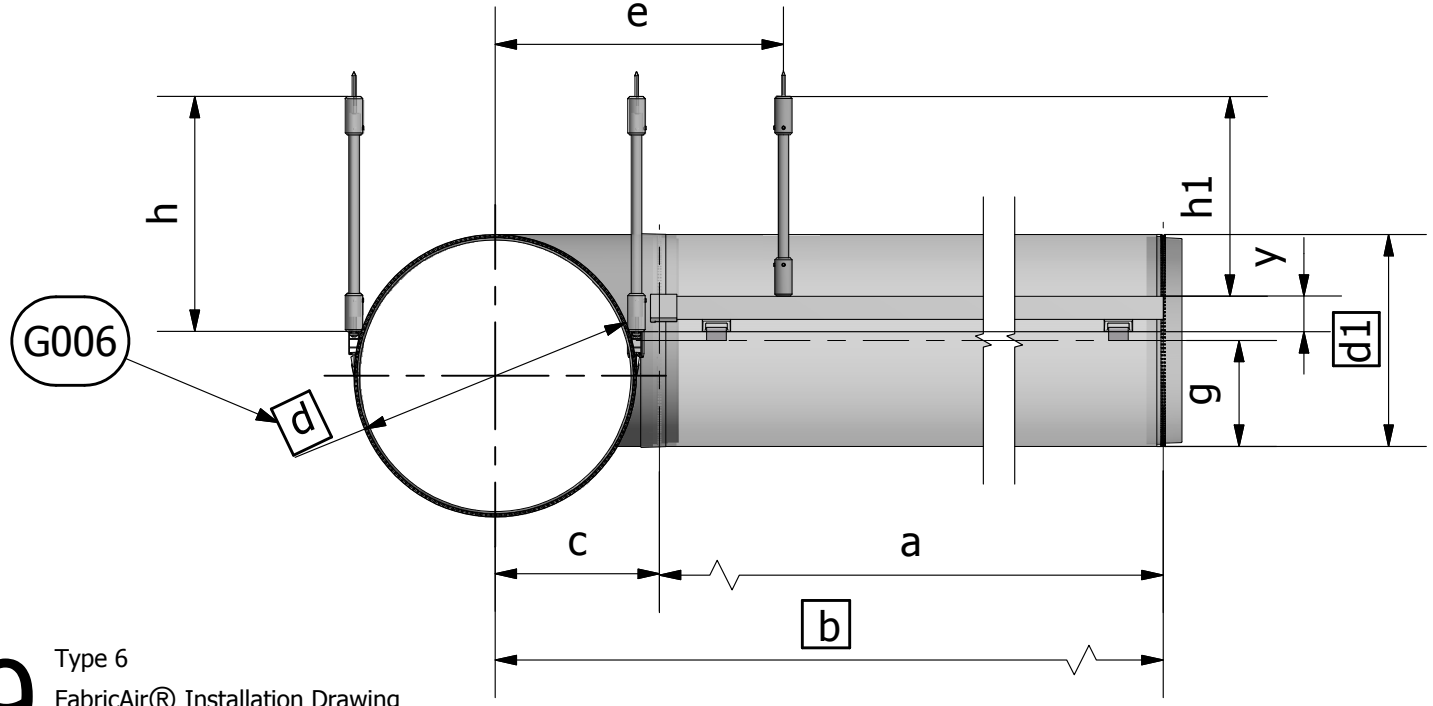

a = b - c
g = ½ d1
c = ½ d + 35mm[1.4"]
y = c - g - 35mm[1.4"]
h1 = h - y
e = c + Max. 200mm [8"]

06.19

Type 6
FabricAir® Installation Drawing
2003-0619-000 (2014-FEB)

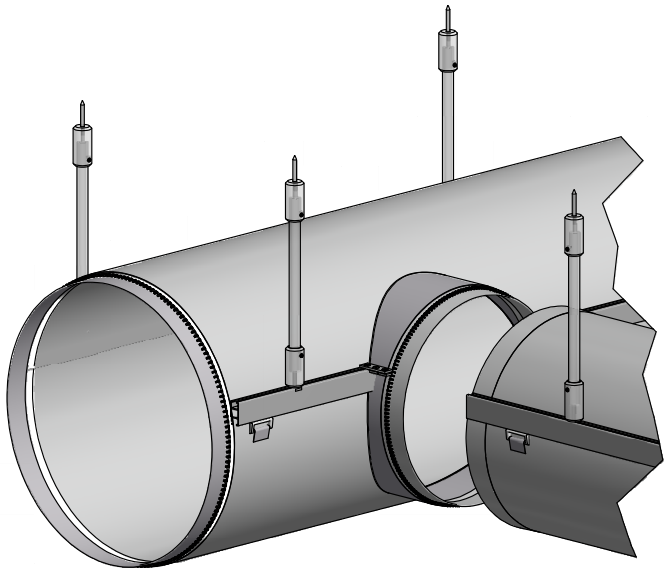

1

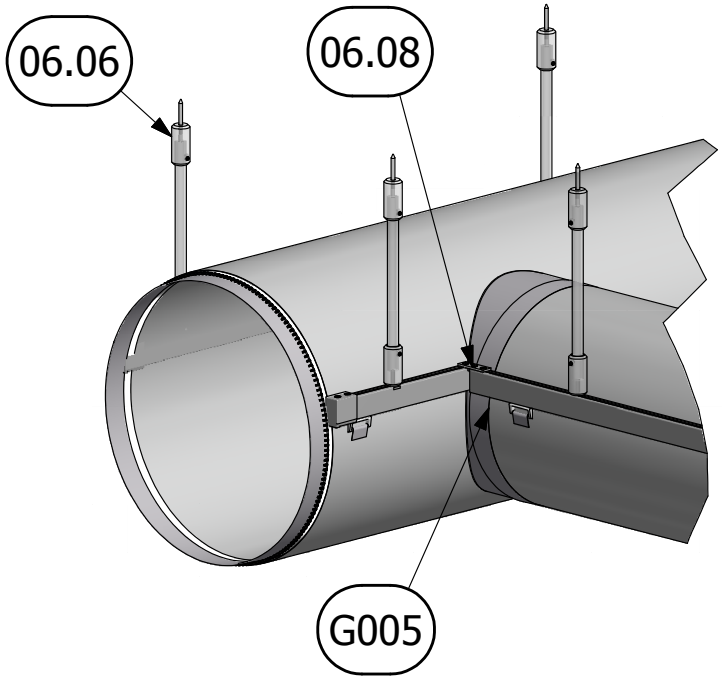

2

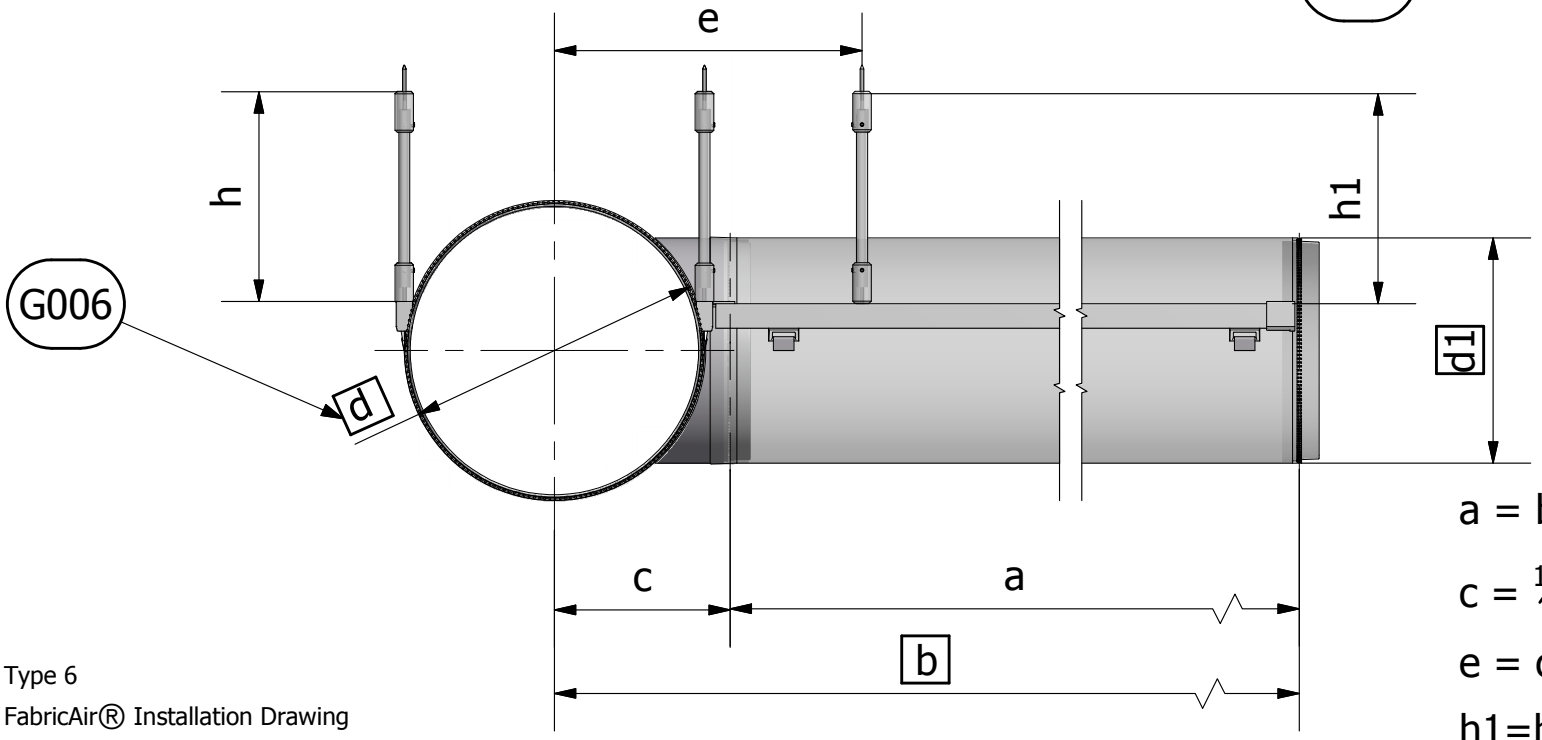

a = b - c

c = ½ d + 35mm[1.4"]

e = c + Max.200mm[8"]

h1=h

06.20

Type 6

FabricAir® Installation Drawing

2003-0620-000 (2014-FEB)

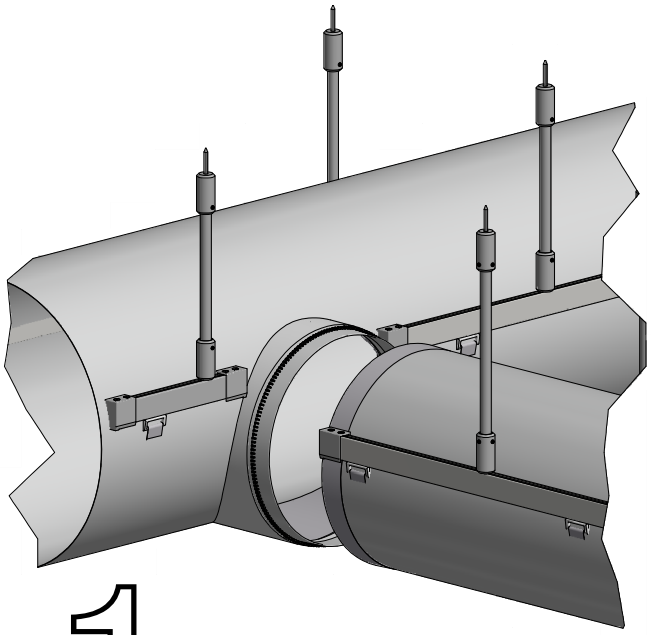

1

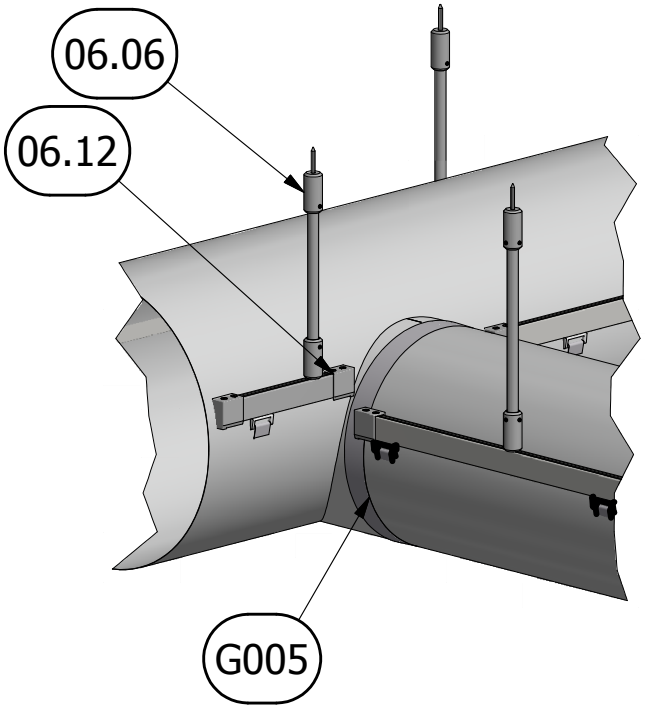

2

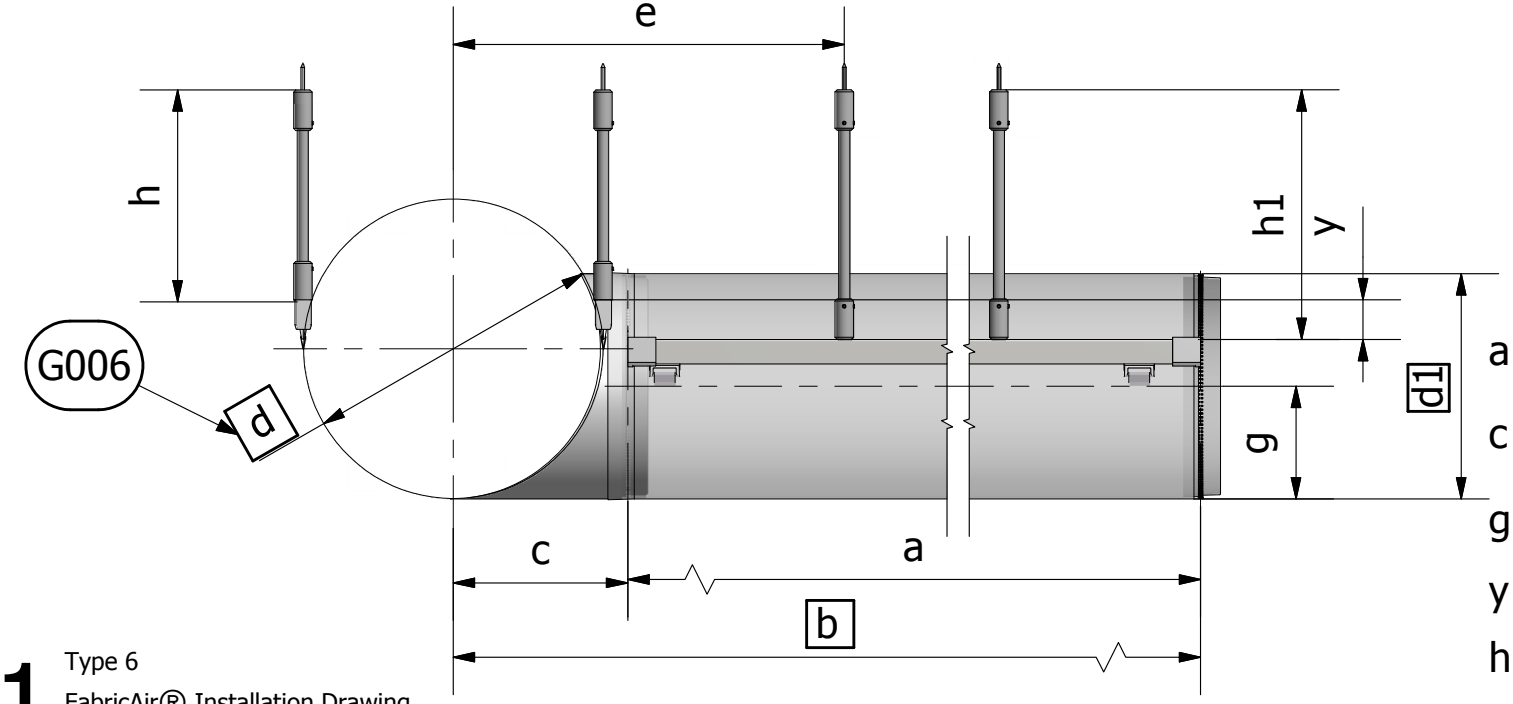

a = b - c

c = ½ d + 35mm[1.4"]

g = ½ d1

y = c - g - 35mm[1.4"]

h1 = h + y

e = c + Max.200mm[8"]

06.21

Type 6

FabricAir® Installation Drawing

2003-0621-000 (2014-FEB)

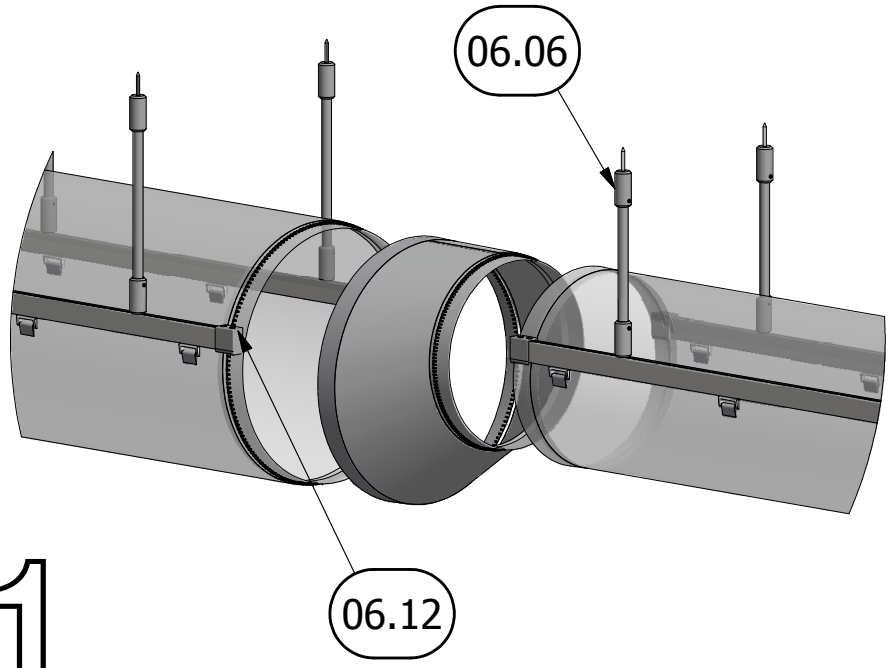

1

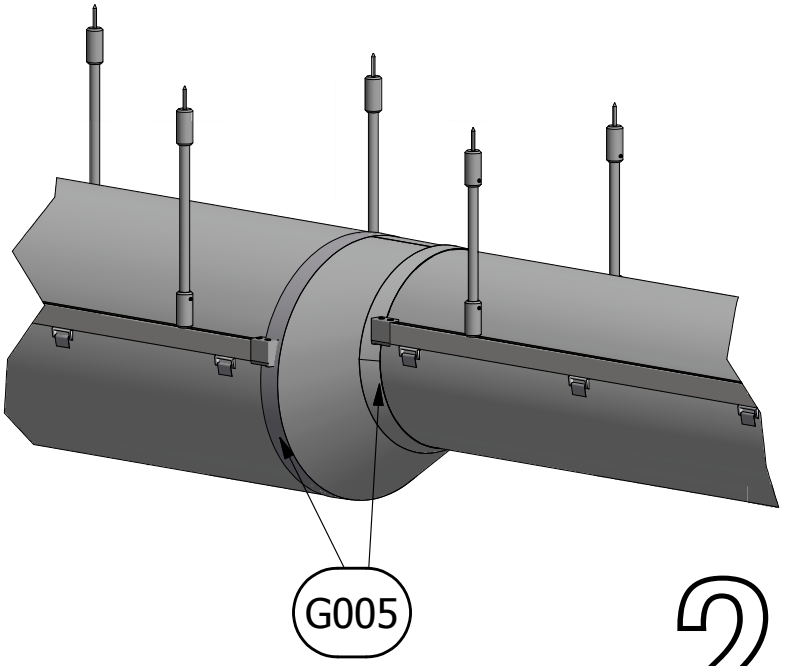

2

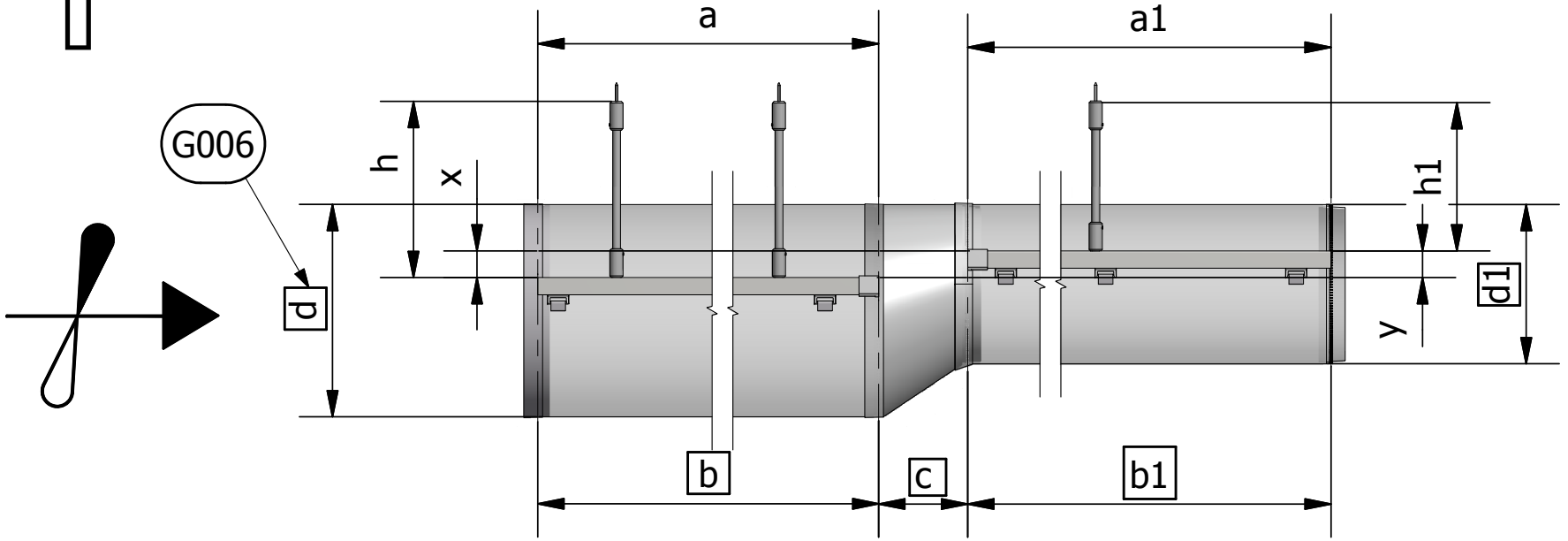

a = b

a1 = b1

y = ½ d - ½ d1

h1 = h - y

06.22

Type 6.
FabricAir® Installation Drawing
2003-0622-000 (2014-FEB)

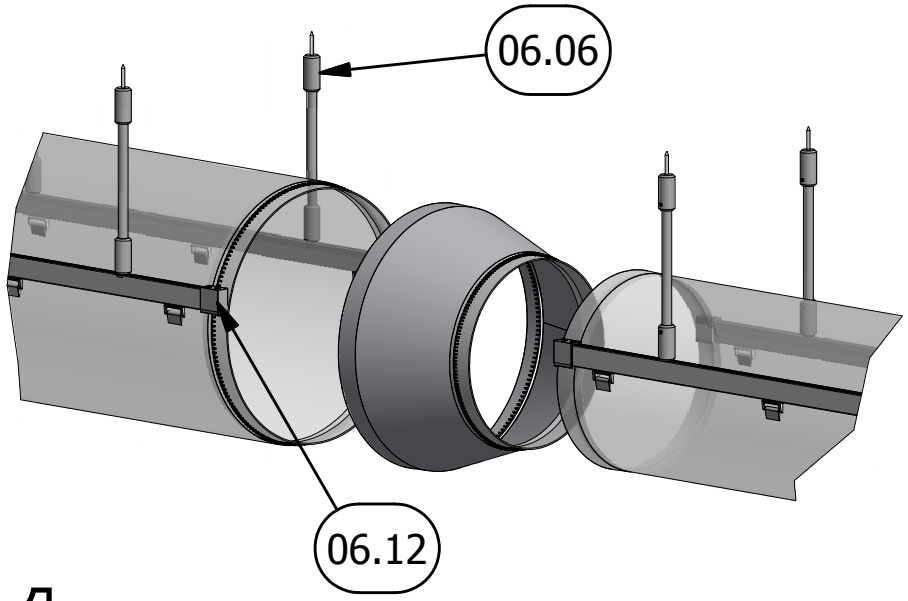

1

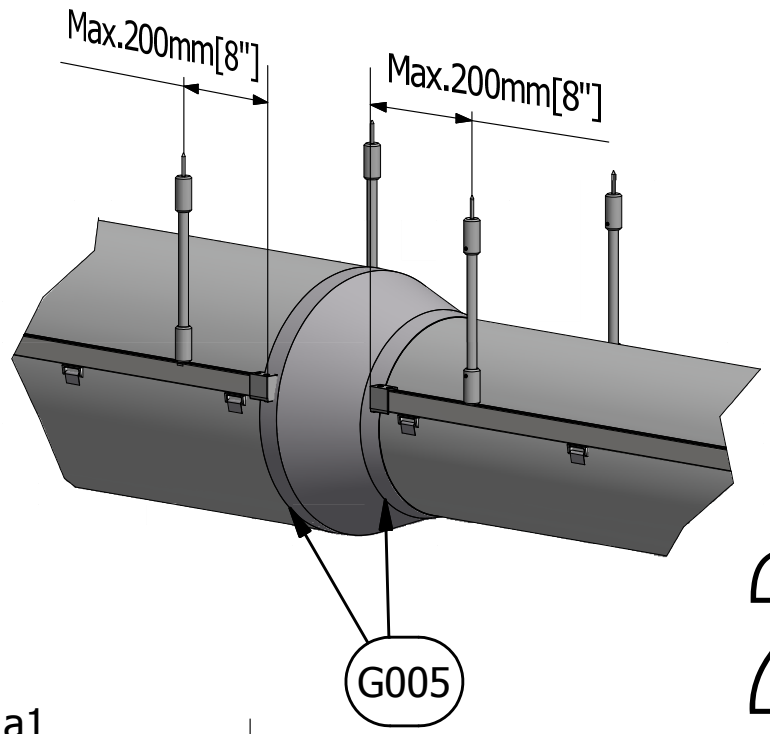

2

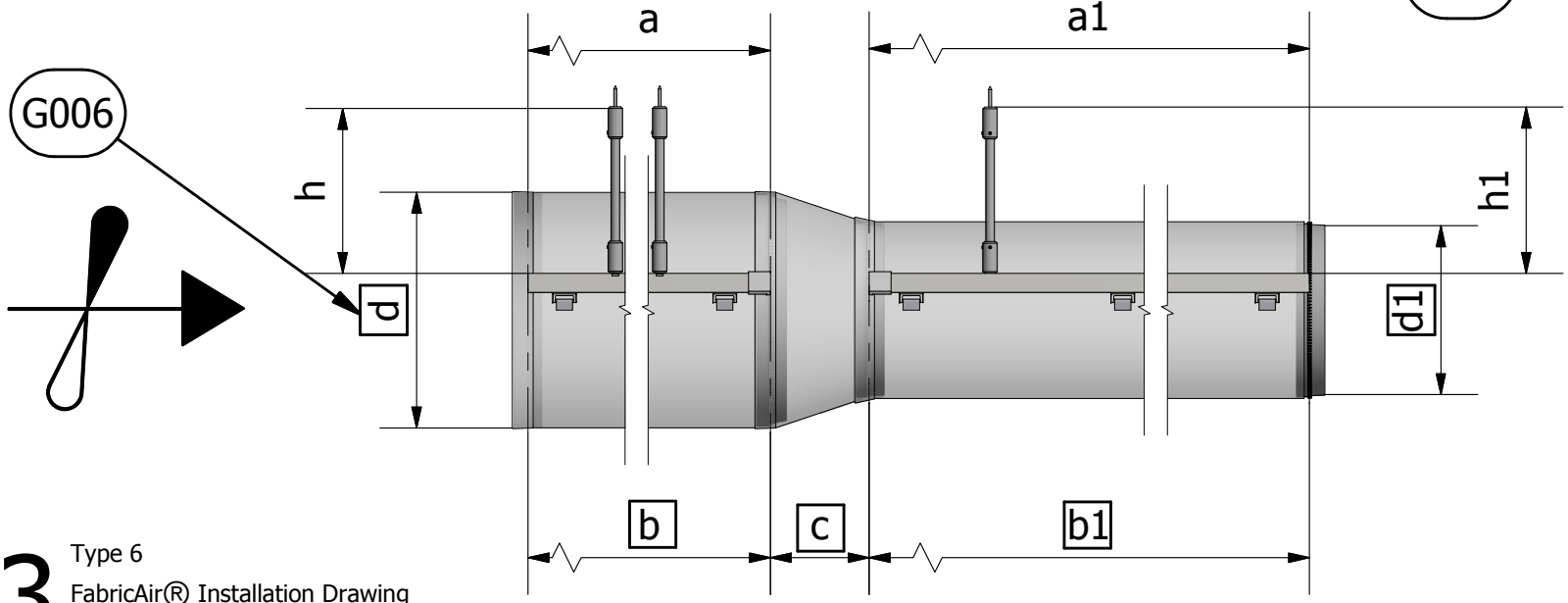

a = b

a1 = b1

h1 = h

06.23

Type 6

FabricAir® Installation Drawing

2003-0623-000 (2014-FEB)

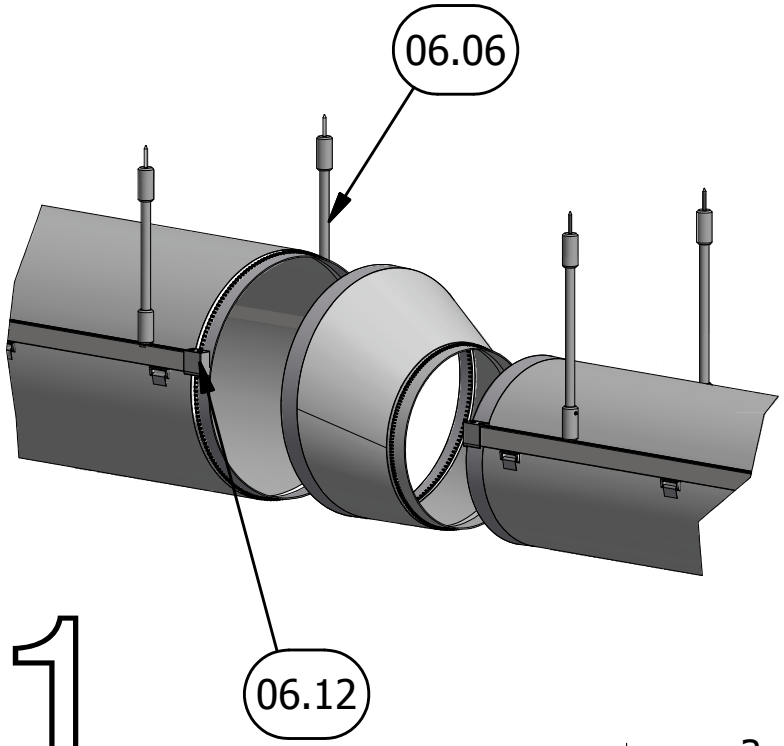

1

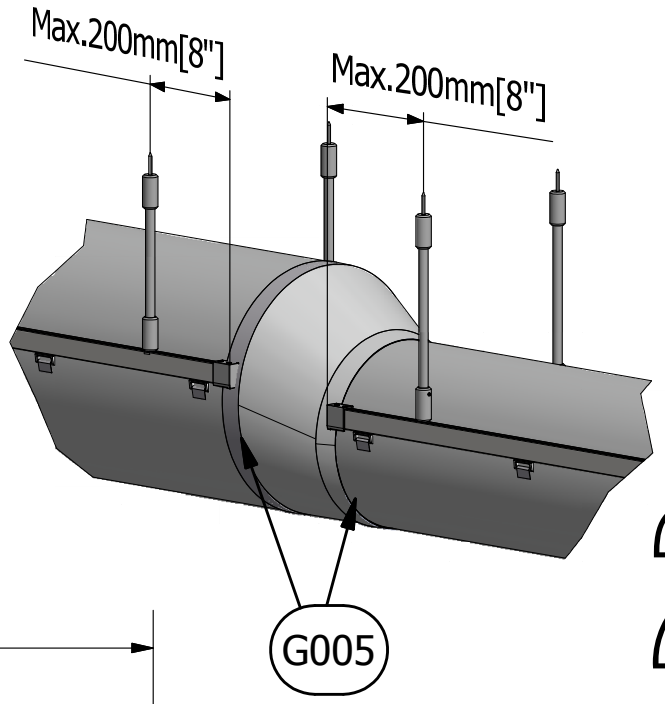

2

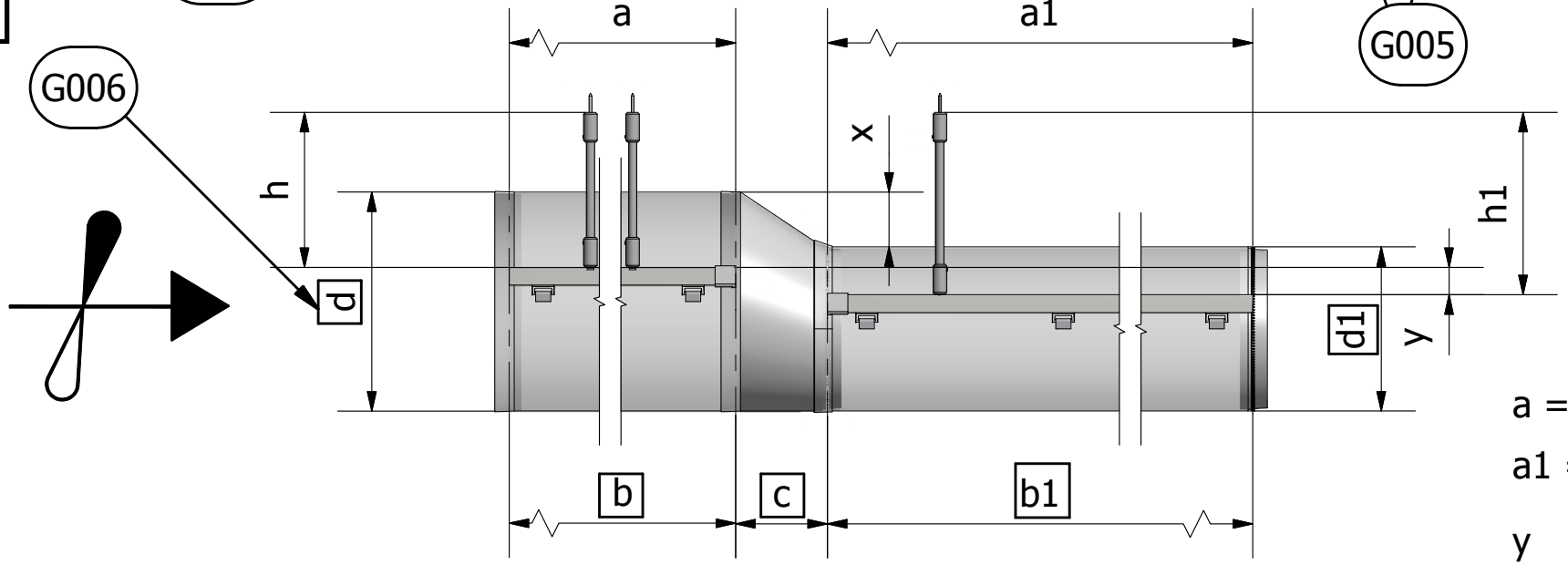

a = b

a1 = b1

y = ½ d - ½ d1

h1 = h + y

06.24

Type 6

FabricAir® Installation Drawing

2003-0624-000 (2014-FEB)

90°

d-Duct Diam.[inch]	d-Duct Diam.[mm]	L1	L2	g	f	L3	L4
	100	40	13	80	27	-	-
	160	64	21	129	43	-	-
	200	80	27	161	54	-	-
8	205	82	27	165	55	-	-
	250	100	33	201	67	-	-
10	255	102	34	205	68	-	-
	300	121	40	241	80	-	-
12	305	123	41	245	82	-	-
	315	127	42	253	84	-	-
14	360	145	48	289	96	-	-
	400	161	54	321	107	-	-
16	410	165	55	329	110	-	-
	450	181	60	362	121	-	-
18	460	185	62	370	123	-	-
	500	201	67	402	134	-	-
20	510	205	68	410	137	-	-
22	560	225	75	450	150	-	-
	600	241	80	482	161	-	-
24	610	245	82	490	163	-	-
	630	-	84	-	169	253	-
26	660	-	88	-	177	265	-
	710	-	95	-	190	285	-
28	715	-	96	-	192	287	-
30	765	-	103	-	205	307	-
	800	-	107	-	214	322	-
32	815	-	109	-	218	328	-
34	865	-	116	-	232	348	-
	900	-	121	-	241	362	-
36	915	-	123	-	245	368	-
38	965	-	129	-	259	388	-
	1000	-	134	-	268	402	-
40	1020	-	137	-	273	410	-
42	1070	-	143	-	287	430	-
	1100	-	147	-	295	442	-
44	1120	-	150	-	300	450	-
46	1170	-	157	-	314	470	-
	1200	-	161	-	322	482	-
48	1220	-	163	-	327	490	-
	1250	-	167	-	335	502	-
50	1270	-	170	-	340	510	-
	1300	-	174	-	348	523	-
52	1320	-	177	-	354	531	-
	1400	-	188	-	375	563	-
56	1425	-	191	-	382	573	-
58	1480	-	198	-	397	595	-
	1500	-	201	-	402	603	-
60	1525	-	204	-	409	613	-
62	1580	-	212	-	423	635	-
	1600	-	214	-	429	643	-
64	1630	-	218	-	437	655	-
66	1680	-	225	-	450	675	-
	1700	-	228	-	456	683	-
68	1730	-	232	-	464	695	-
70	1780	-	238	-	477	715	-
	1800	-	241	-	482	723	-
72	1830	-	245	-	490	736	-
	1900	-	-	-	-	764	255
76	1930	-	-	-	-	776	259
	2000	-	-	-	-	804	268
80	2035	-	-	-	-	818	273

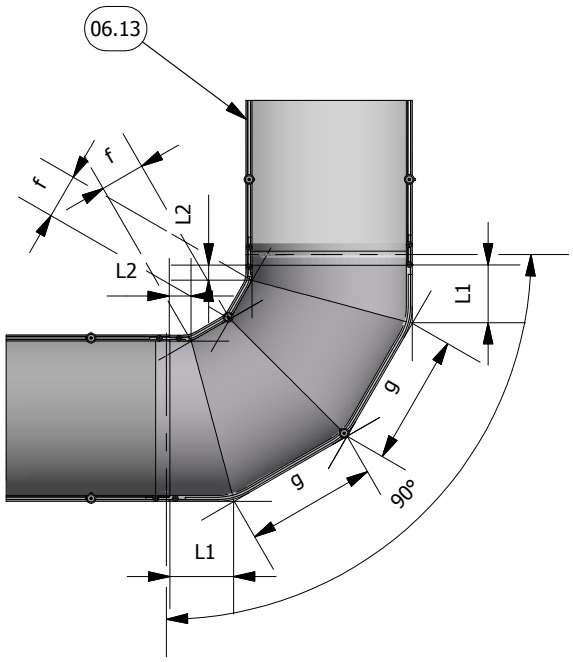

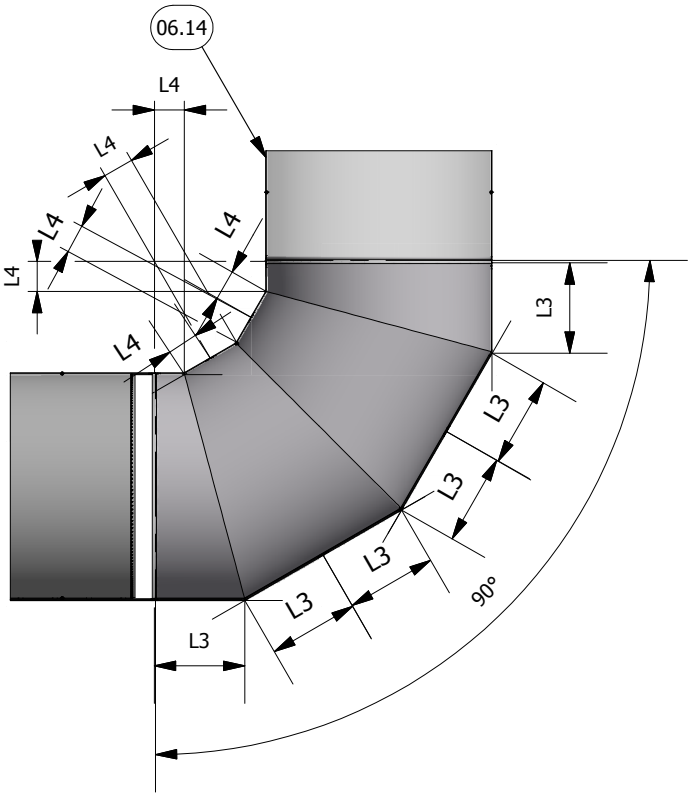

45°

d-Duct Diam.[inch]	d-Duct Diam.[mm]	L1	L2
	100	-29	-70
	160	8	-58
	200	33	-50
8	205	36	-49
	250	64	-39
10	255	67	-38
	300	95	-29
12	305	99	-28
	315	105	-26
14	360	133	-16
	400	158	-8
16	410	164	-6
	450	189	2
18	460	195	4
	500	220	13
20	510	226	15
22	560	257	25
	600	282	33
24	610	288	35
	630	300	39
26	660	319	46
	710	350	56
28	715	353	57
30	765	384	67
	800	406	75
32	815	415	78
34	865	446	88
	900	468	95
36	915	478	99
38	965	509	109
	1000	530	116
40	1020	543	120
42	1070	574	131
	1100	592	137
44	1120	605	141
46	1170	636	151
	1200	655	158
48	1220	667	162
	1250	686	168
50	1270	698	172
	1300	717	178
52	1320	729	182
	1400	779	199
56	1425	794	204
58	1480	829	216
	1500	841	220
60	1525	857	225
62	1580	891	236
	1600	903	240
64	1630	922	247
66	1680	953	257
	1700	965	261
68	1730	984	267
70	1780	1015	278
	1800	1027	282
72	1830	1046	288
	1900	1090	303
76	1930	1108	309
	2000	1152	323
80	2035	1173	330

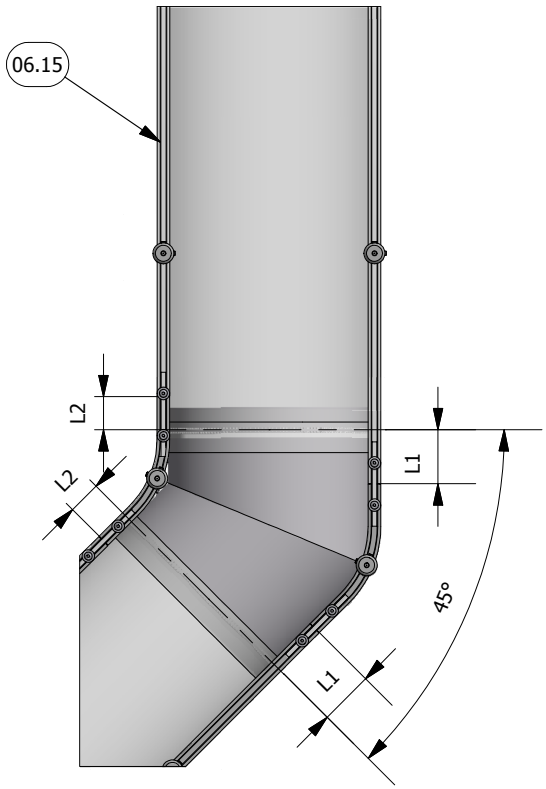

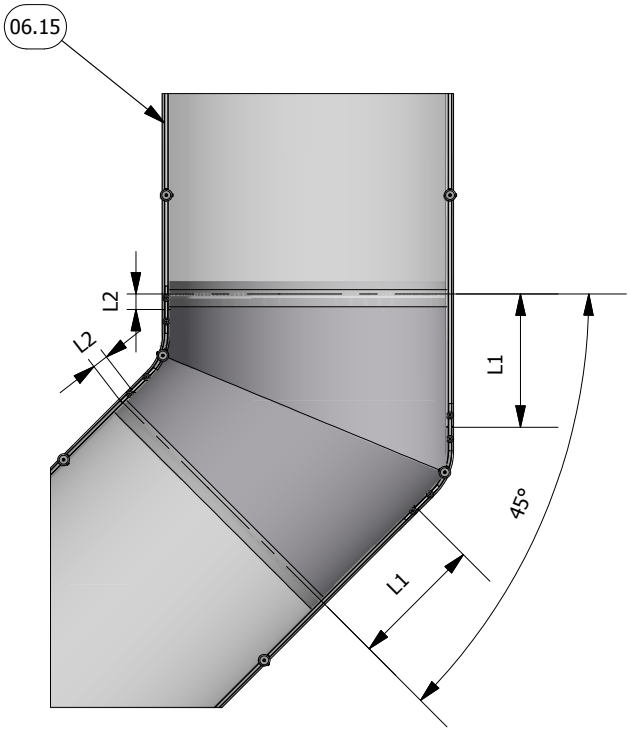

30°

d-Duct Diam.[inch]	d-Duct Diam.[mm]	L1	L2
	100	-33	-60
	160	-9	-52
	200	7	-46
8	205	9	-46
	250	27	-40
10	255	29	-39
	300	48	-33
12	305	50	-32
	315	54	-31
14	360	72	-25
	400	88	-19
16	410	92	-18
	450	108	-13
18	460	112	-11
	500	128	-6
20	510	132	-5
22	560	152	2
	600	168	7
24	610	172	9
	630	180	11
26	660	192	15
	710	212	22
28	715	214	23
30	765	234	29
	800	249	34
32	815	255	36
34	865	275	43
	900	289	48
36	915	295	50
38	965	315	56
	1000	329	61
40	1020	337	64
42	1070	357	70
	1100	369	74
44	1120	377	77
46	1170	397	84
	1200	409	88
48	1220	417	90
	1250	429	94
50	1270	437	97
	1300	450	101
52	1320	458	104
	1400	490	115
56	1425	500	118
58	1480	522	125
	1500	530	128
60	1525	540	131
62	1580	562	139
	1600	570	141
64	1630	582	145
66	1680	602	152
	1700	610	155
68	1730	622	159
70	1780	642	165
	1800	650	168
72	1830	663	172
	1900	691	182
76	1930	703	186
	2000	731	195
80	2035	745	200

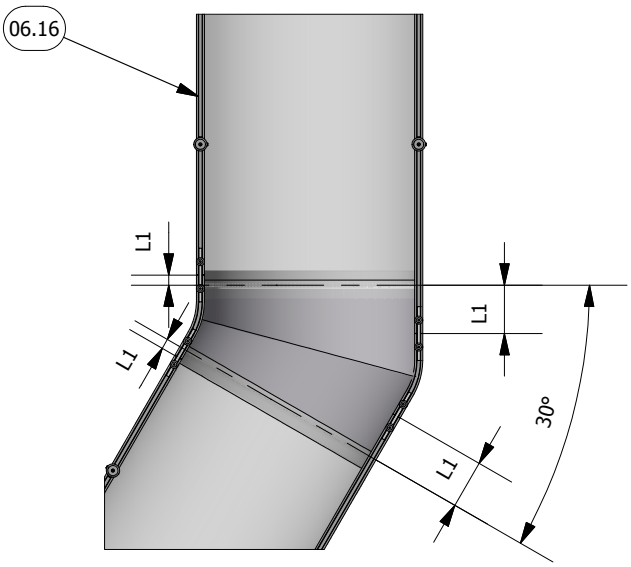

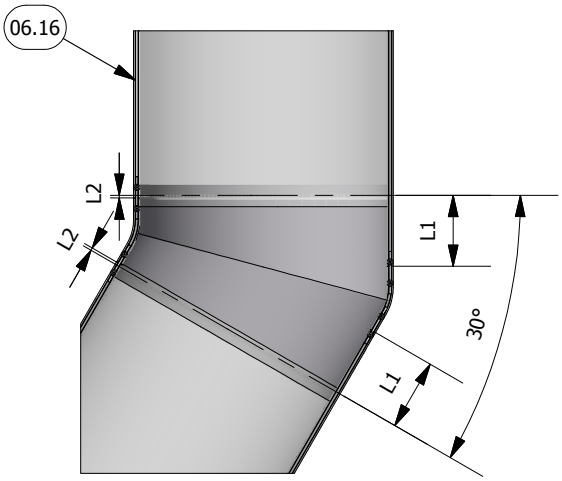

60°

d-Duct Diam.[inch]	d-Duct Diam.[mm]	L1	L2
	100	-23	-81
	160	29	-64
	200	63	-52
8	205	68	-51
	250	107	-38
10	255	111	-36
	300	150	-23
12	305	154	-22
	315	163	-19
14	360	202	-6
	400	236	5
16	410	245	8
	450	280	20
18	460	288	23
	500	323	34
20	510	332	37
22	560	375	52
	600	410	63
24	610	418	66
	630	436	72
26	660	462	81
	710	505	95
28	715	509	96
30	765	553	111
	800	583	121
32	815	596	125
34	865	639	140
	900	669	150
36	915	682	154
38	965	726	169
	1000	756	179
40	1020	773	184
42	1070	817	199
	1100	843	208
44	1120	860	213
46	1170	903	218
	1200	929	236
48	1220	947	242
	1250	973	251
50	1270	990	257
	1300	1016	265
52	1320	1033	271
	1400	1102	294
56	1425	1124	301
58	1480	1172	317
	1500	1189	323
60	1525	1211	330
62	1580	1258	346
	1600	1275	352
64	1630	1301	360
66	1680	1344	375
	1700	1361	380
68	1730	1387	389
70	1780	1431	404
	1800	1448	409
72	1830	1474	418
	1900	1534	438
76	1930	1560	447
	2000	1621	467
80	2035	1651	477

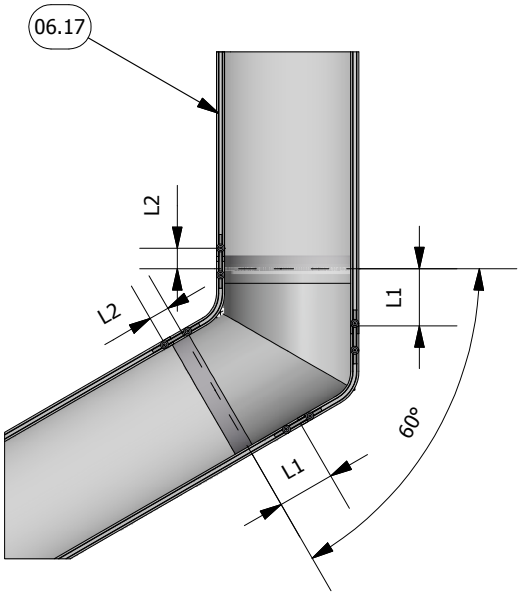

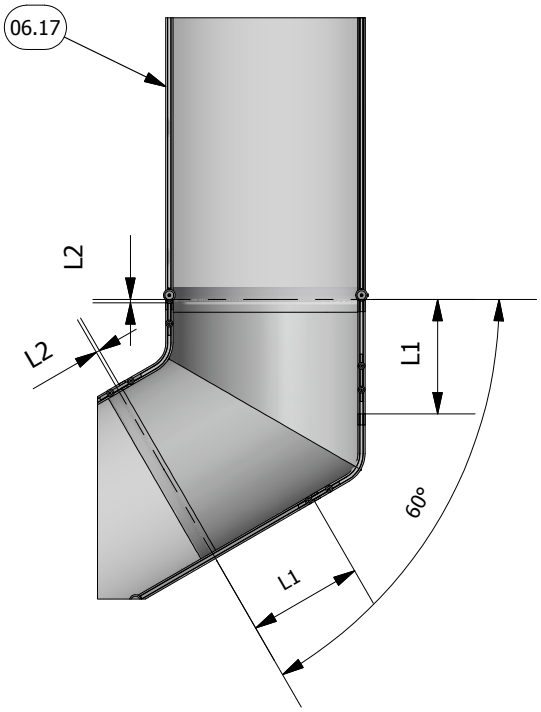

06.43

Type 6
FabricAir® Installation Drawing
2003-0643-000 (2014-FEB)

15°

d-Duct Diam.[inch]	d-Duct Diam.[mm]	L1	L2
	100	-37	-51
	160	-25	-47
	200	-18	-45
8	205	-17	-45
	250	-8	-42
10	255	-7	-41
	300	2	-38
12	305	3	-38
	315	5	-37
14	360	14	-34
	400	22	-32
16	410	24	-31
	450	32	-28
18	460	34	-28
	500	42	-25
20	510	44	-24
22	560	54	-21
	600	61	-19
24	610	63	-18
	630	67	-17
26	660	73	-15
	710	83	-11
28	715	84	-11
30	765	94	-8
	800	101	-5
32	815	104	-4
34	865	114	-1
	900	121	1
36	915	124	2
38	965	134	6
	1000	140	8
40	1020	144	9
42	1070	154	12
	1100	160	14
44	1120	164	16
46	1170	174	19
	1200	180	21
48	1220	184	22
	1250	190	24
50	1270	194	26
	1300	200	28
52	1320	204	29
	1400	219	34
56	1425	224	36
58	1480	235	39
	1500	239	41
60	1525	244	42
62	1580	255	46
	1600	259	47
64	1630	265	49
66	1680	275	53
	1700	279	54
68	1730	285	56
70	1780	295	59
	1800	298	60
72	1830	304	62
	1900	318	67
76	1930	324	69
	2000	338	74
80	2035	345	76

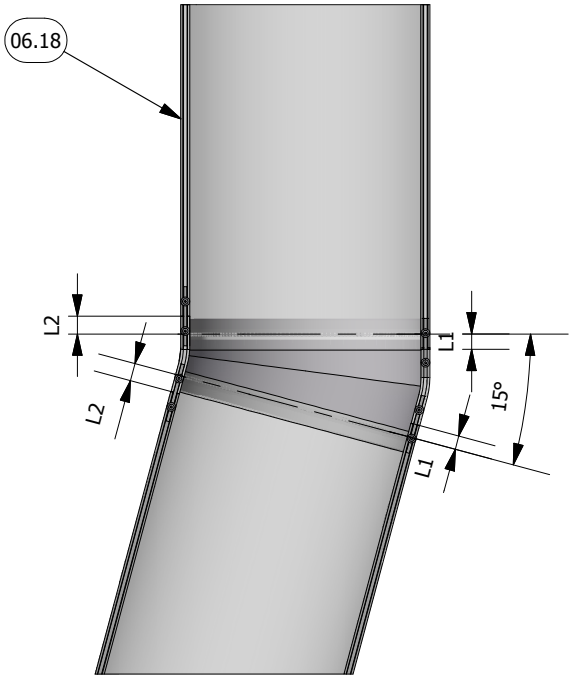

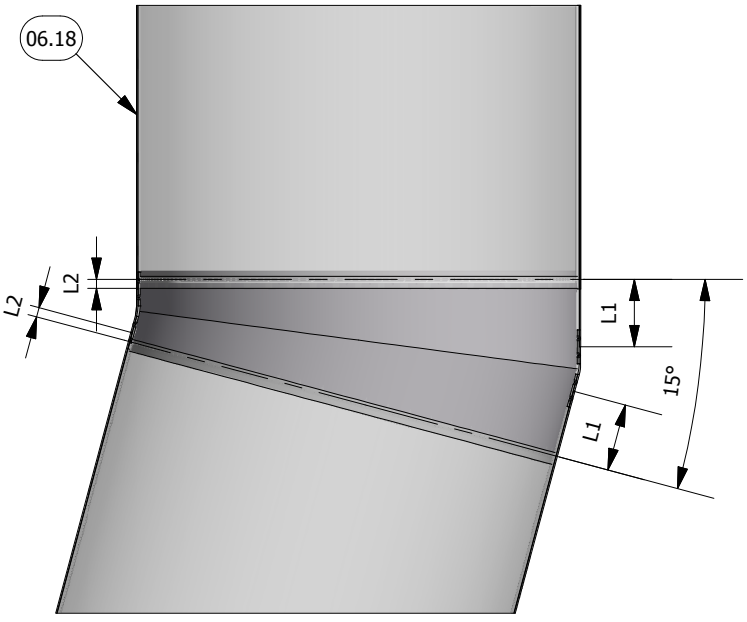

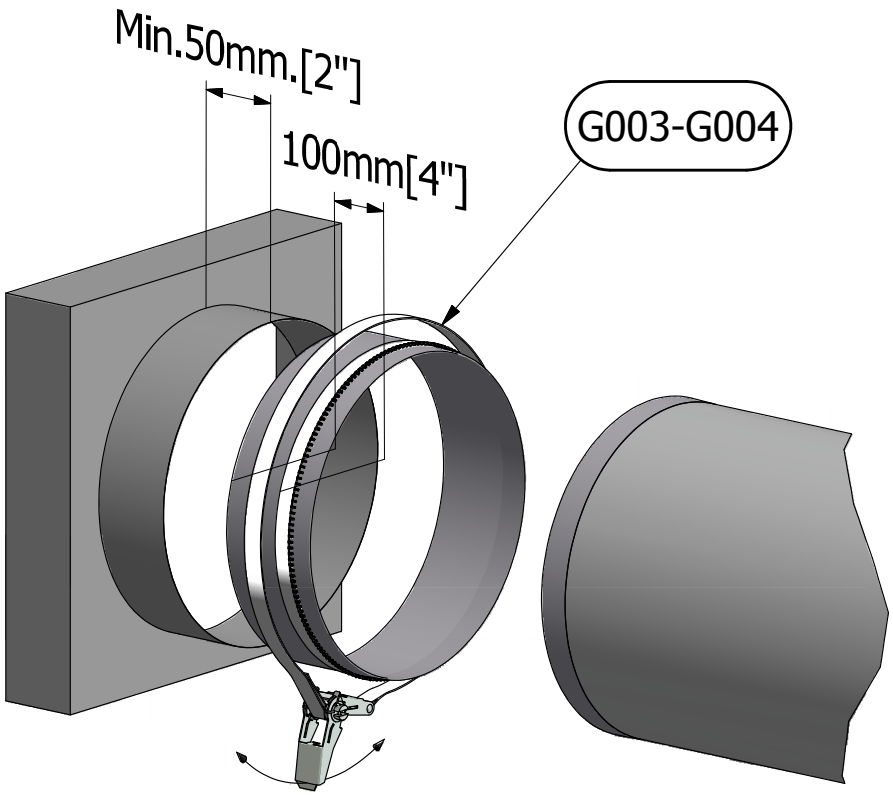

1

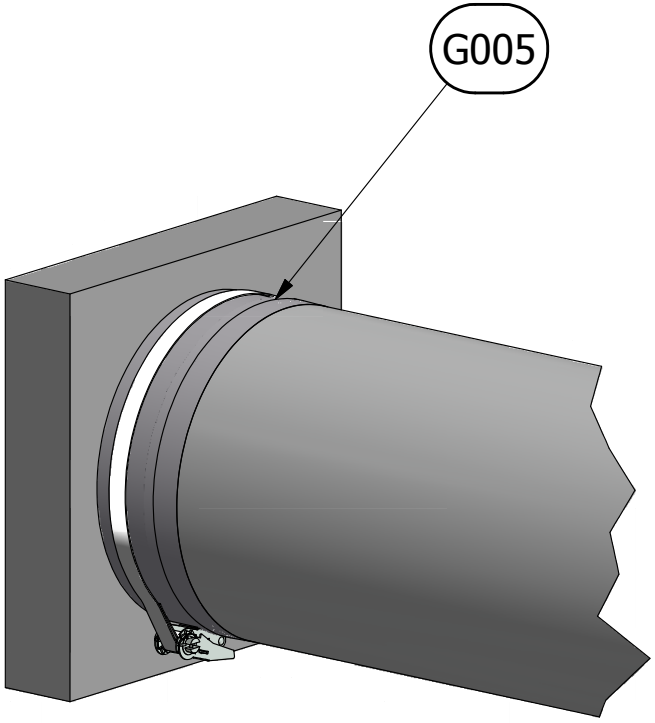

2

G001

FabricAir® Installation Drawing

2003-G001-000 (2014-FEB)

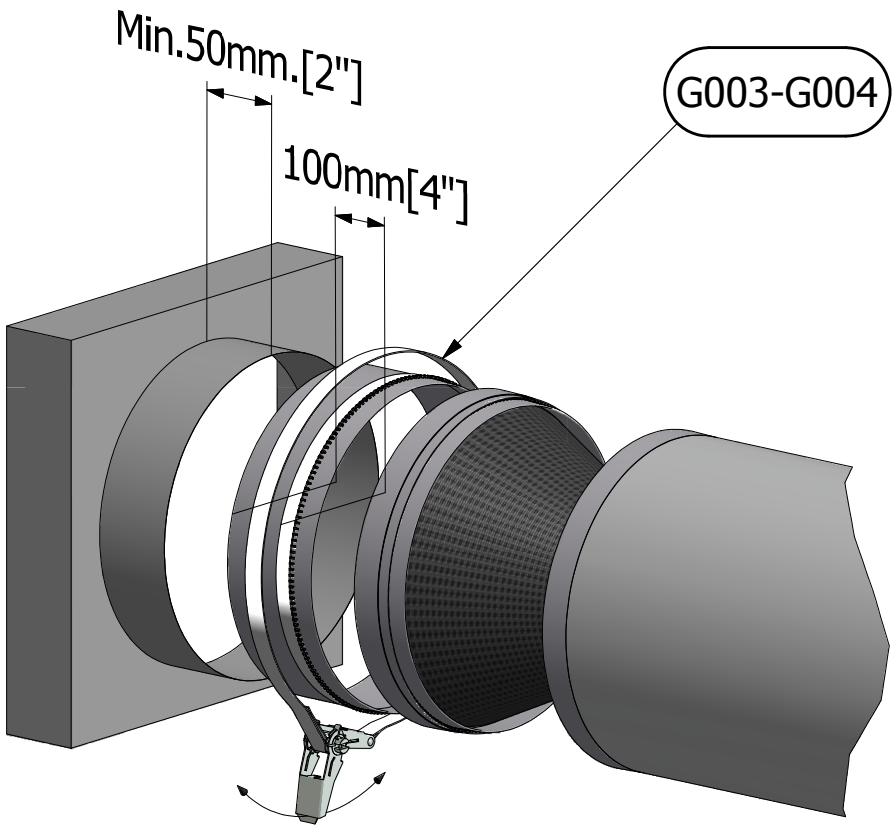

1

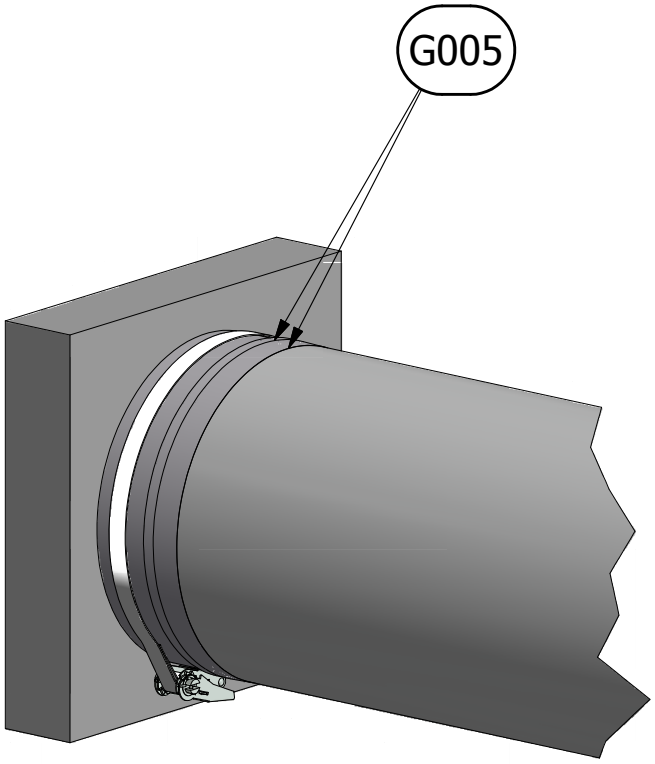

2

G002

FabricAir® Installation Drawing
2003-G002-000 (2014-FEB)

No. 17 (d < 508mm [20in])

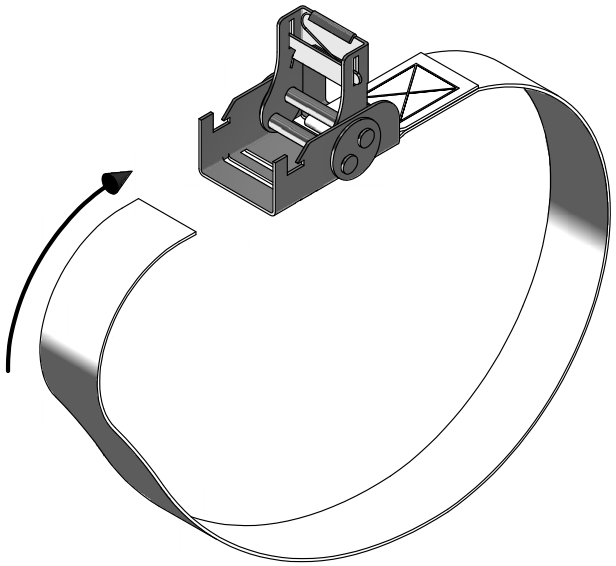

1

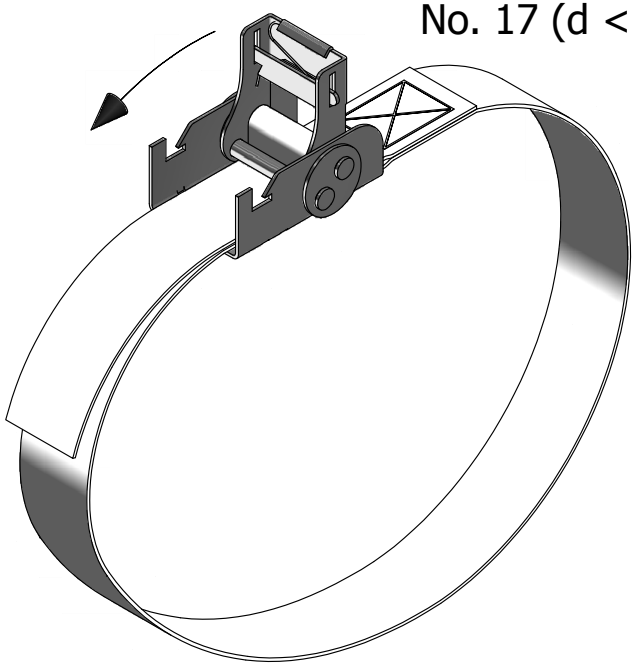

3

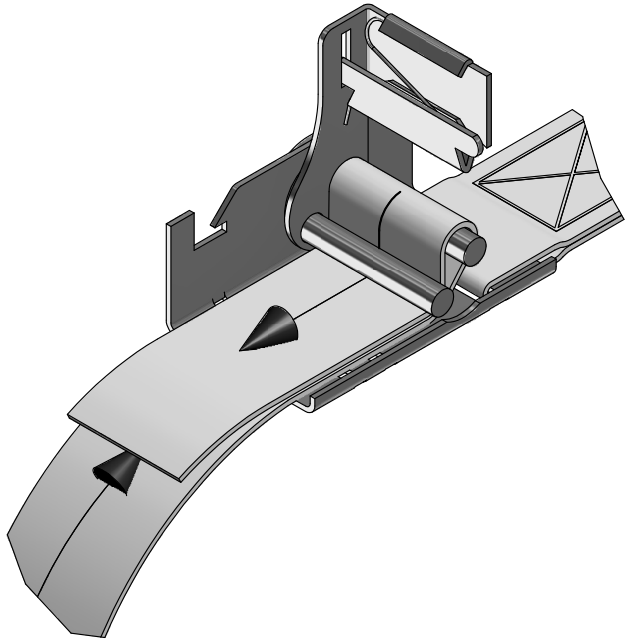

2

4

G003

FabricAir® Installation Drawing
2003-G003-000 (2014-FEB)

No. 18 (508mm [20"] < d < 2032mm[80"])

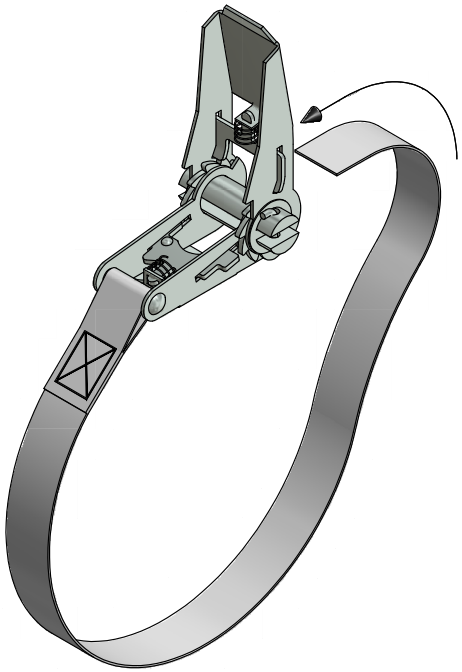

1

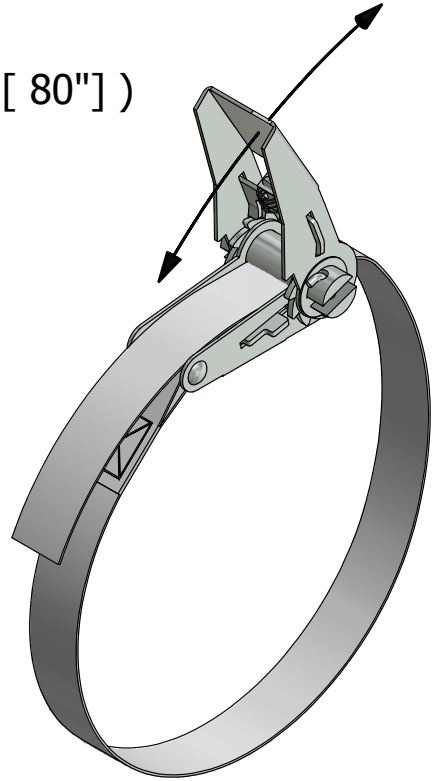

3

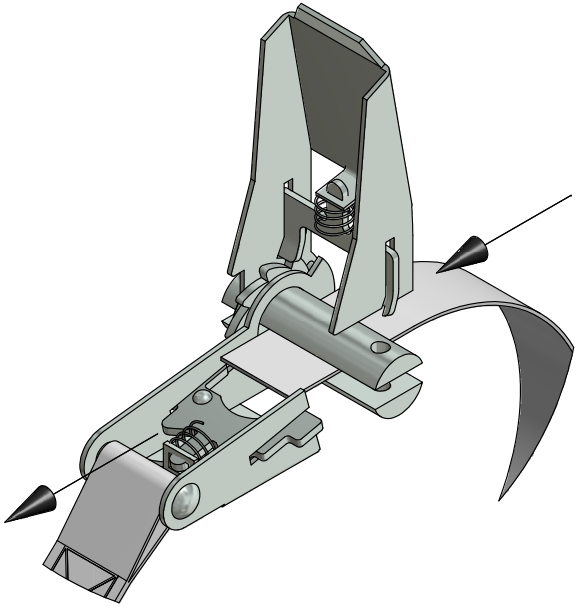

2

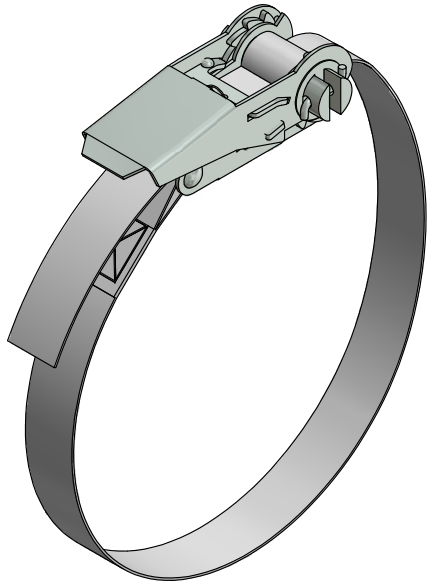

4

G004

FabricAir® Installation Drawing
2003-G004-000 (2014-FEB)

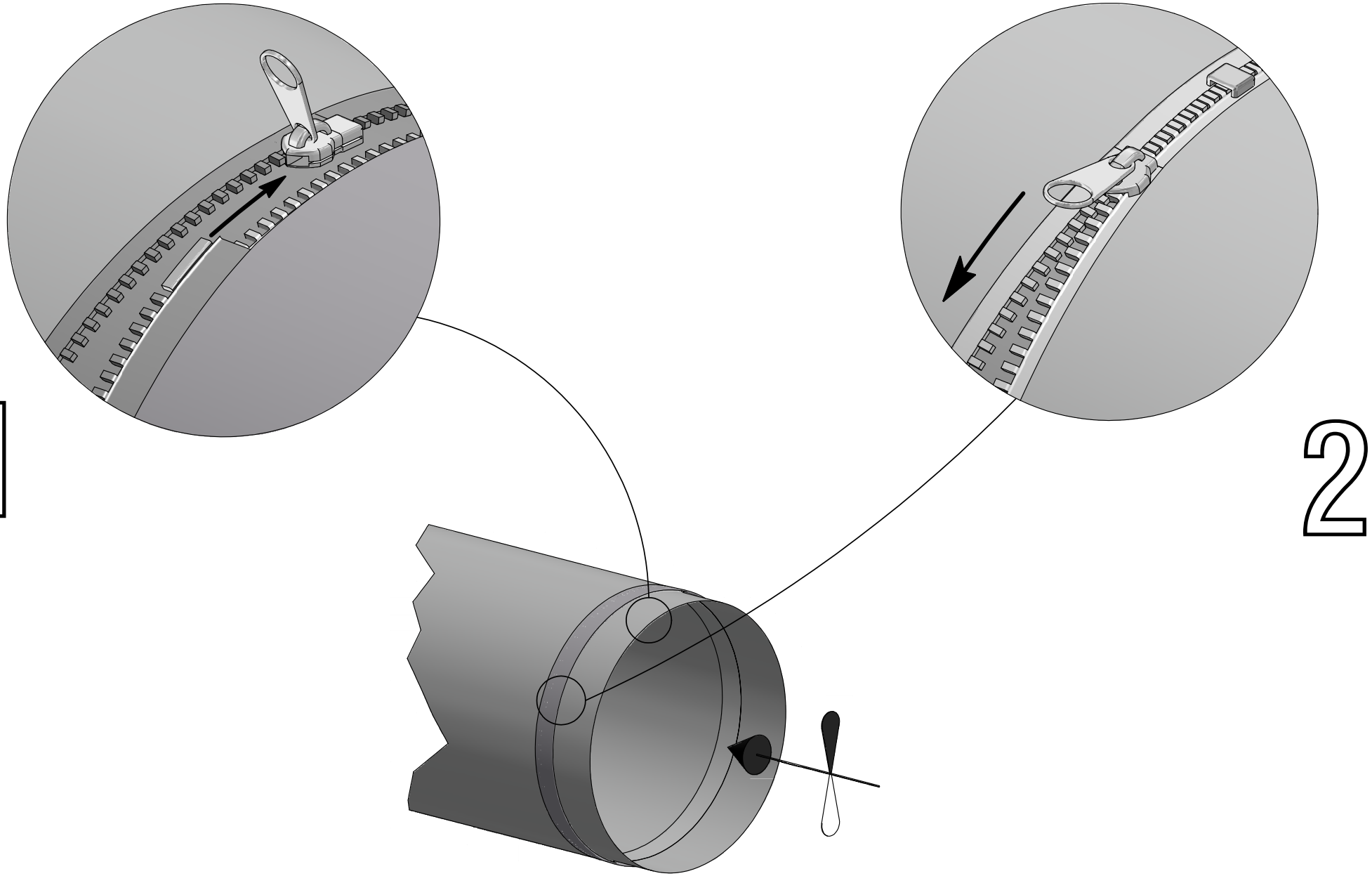

G005

FabricAir® Installation Drawing
2003-G005-000 (2014-FEB)

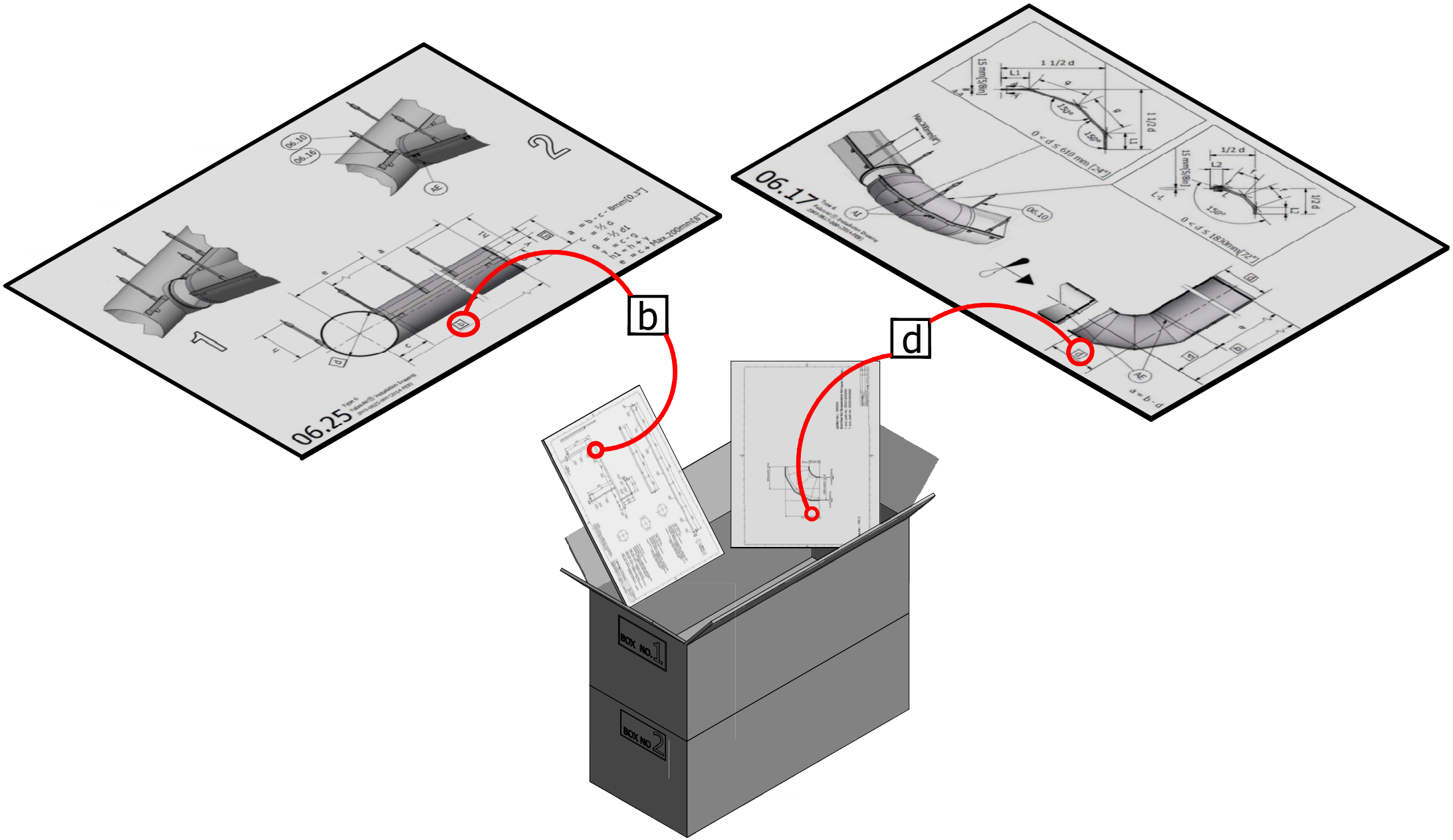

G006

FabricAir® Installation Drawing
2003-G006-000 (2014-FEB)

Note:
The Dimensions given in squares can be found in system drawing which is in box 1 .

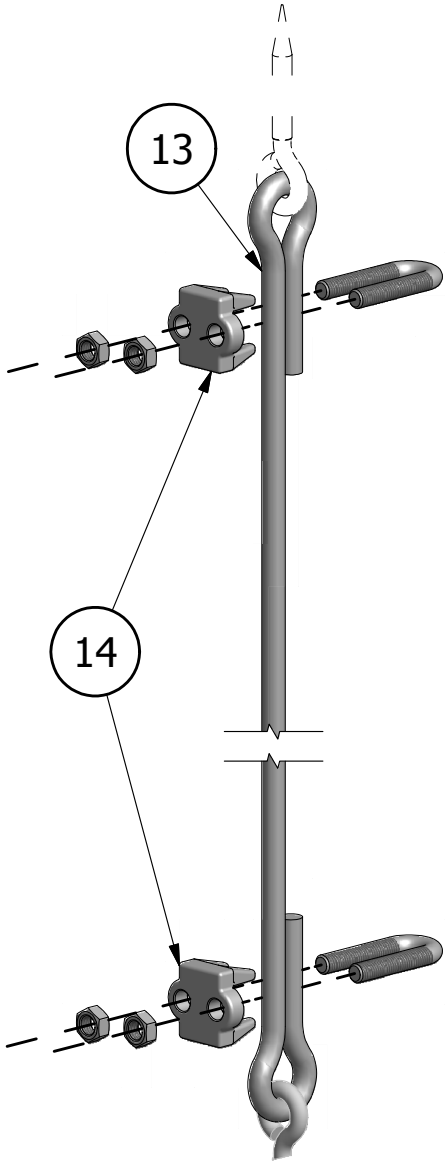

1

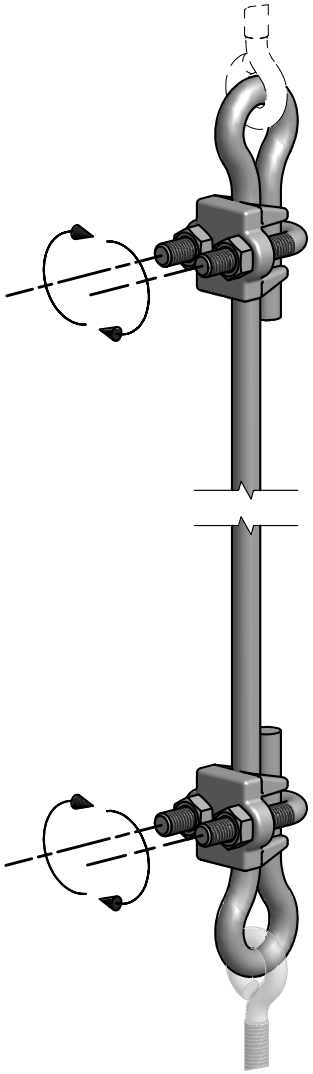

2

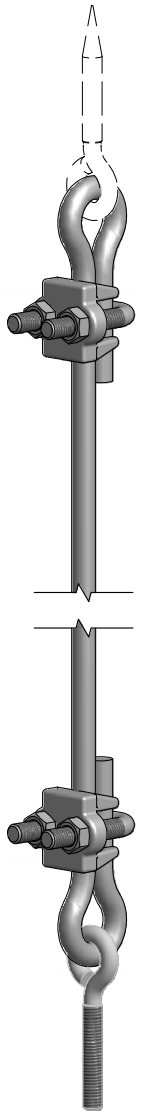

3

G007

FabricAir® Installation Drawing
2003-G007-000 (2014-FEB)

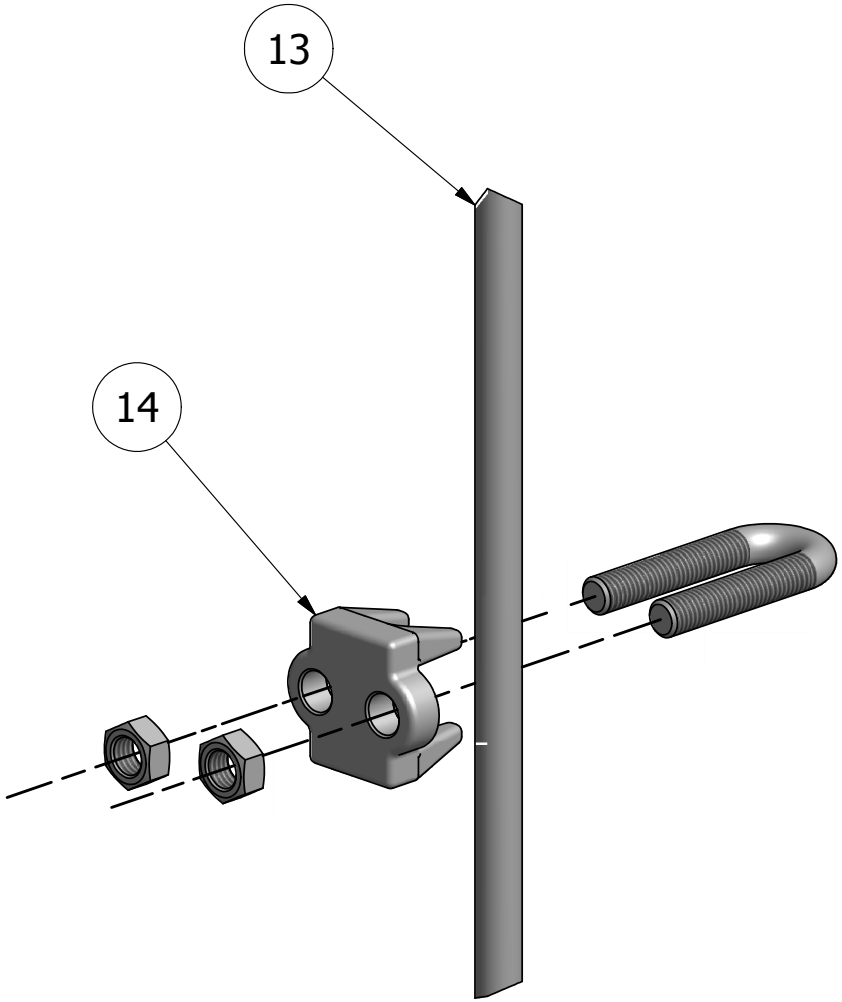

1

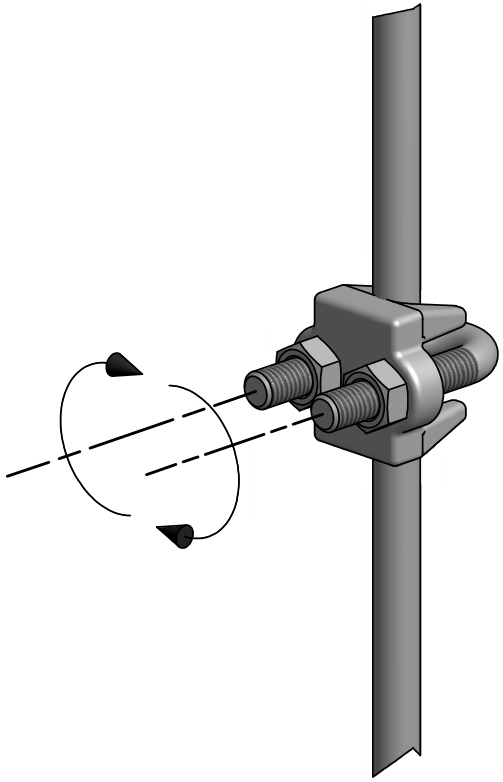

2

G008

FabricAir® Installation Drawing
2003-G008-000(2014-FEB)

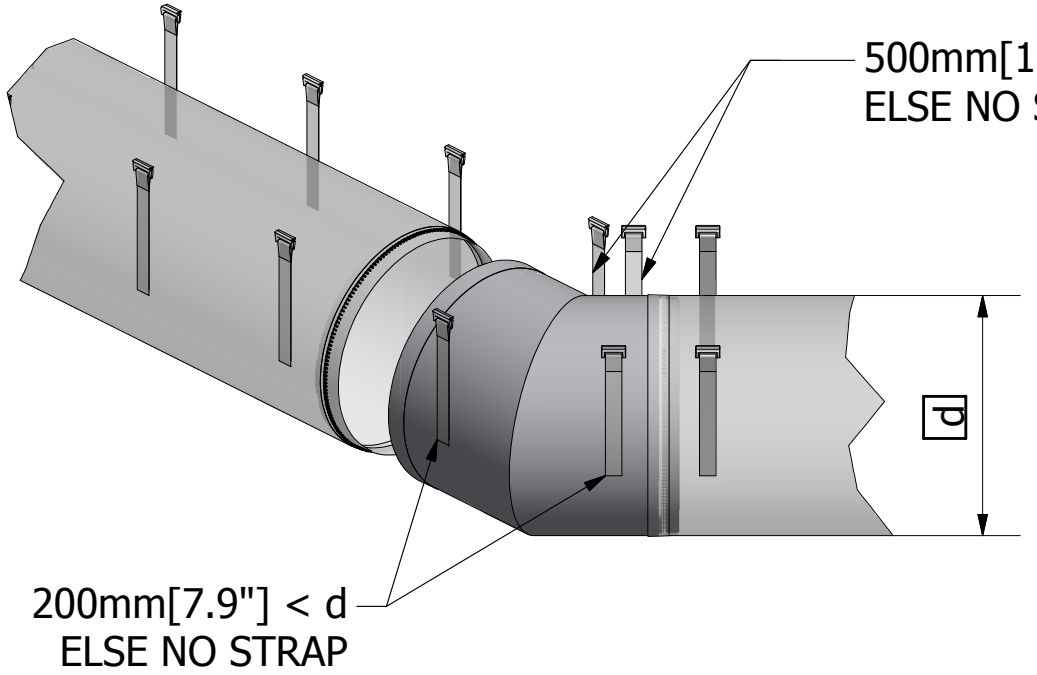

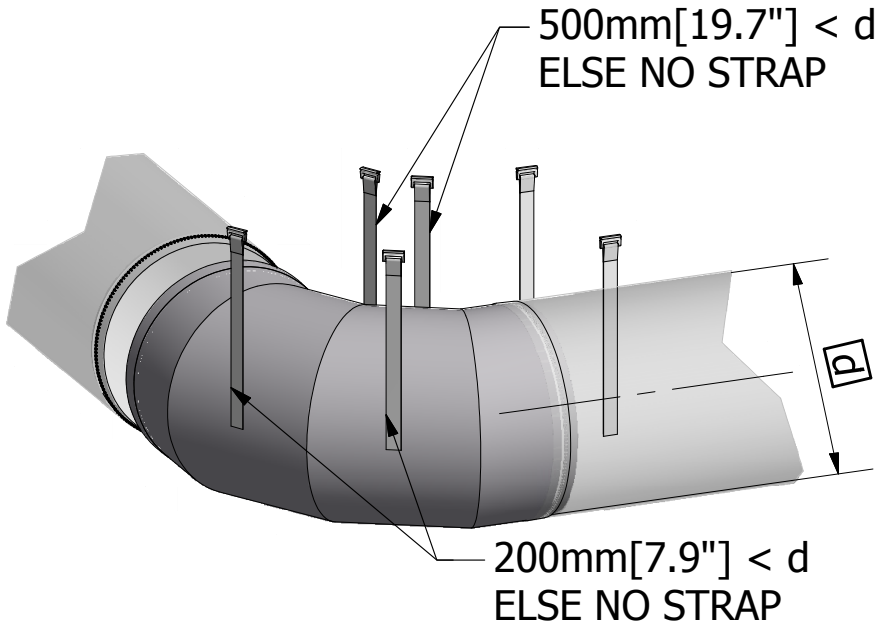

G009

FabricAir® Installation Drawing
2003-G009-000 (2014-FEB)

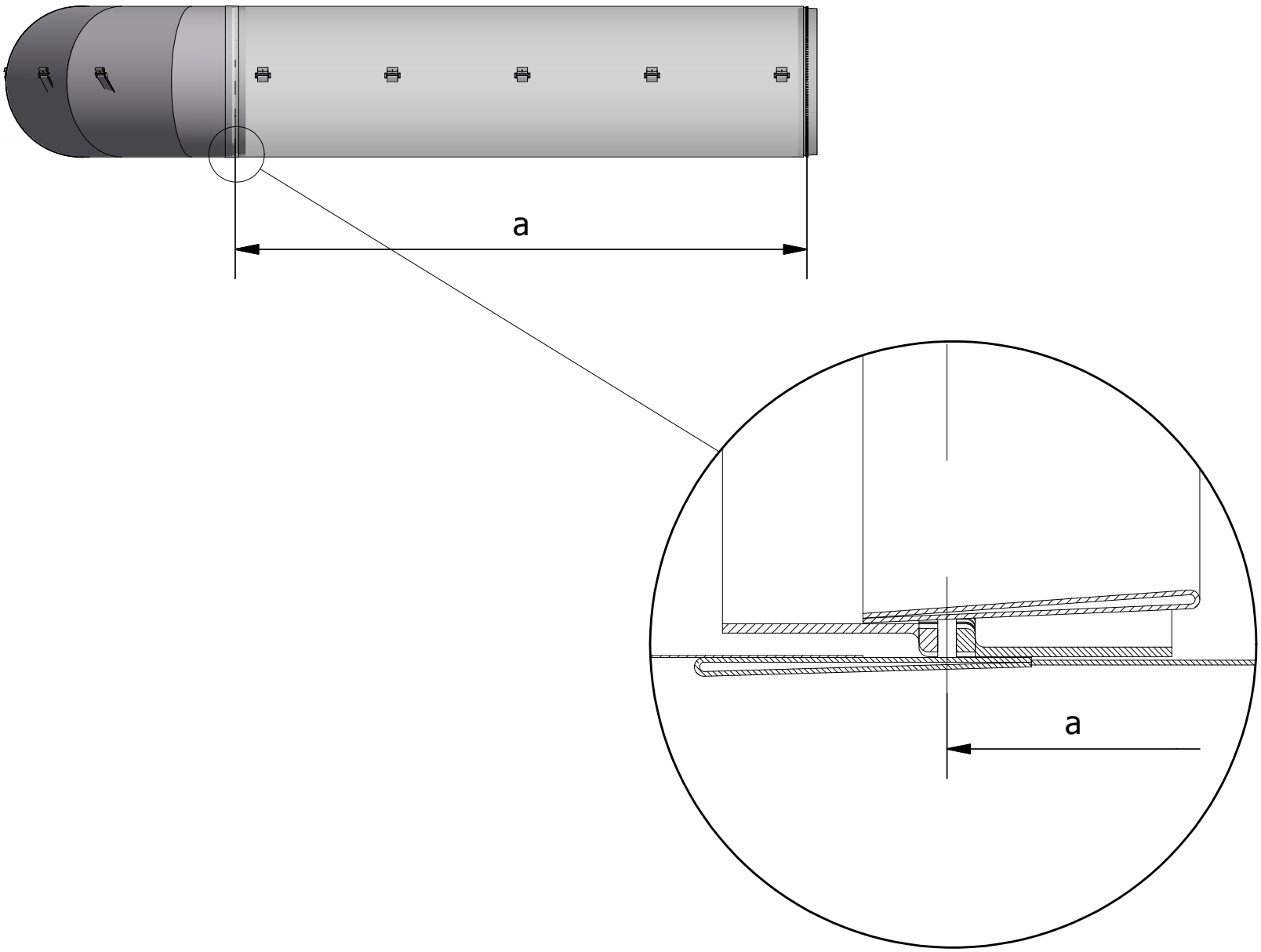

G025

FabricAir® Installation Drawing

2003-G025-000 (2014-FEB)

FabricAir Dispersion Systems
www.fabricair.com

ORDER NO : 1473677

CONTENTS OF BOX NO. 1/2:

INSTRUCTION BAG	1 pcs.
-Drawing Included	1 pcs.

Distribution Ducts

Tag no. 100.1 Inlet Ø 1060 x 100	2 pcs.
Tag no. 100.2 Inlet Ø 1060 x 2625	2 pcs.
Tag no. 100.5 Inlet Ø 500 x 1000 x 9330	2 pcs.

Suspensions

(05) STRETCHER M6 x 90,GV	12 pcs
(14) CABLE LOCK 5MM,GV	52 pcs
(18) FIXING	2 pcs

STRAP , Y/2 , Ø 1100 / 43.3 "W

Box weight : 31 kg

Box size : 780x380x500mm

Label 1/1